GUARANTEED TECHNICAL PARTICULARS FOR 120kV 20kA TYPE-SH PORCELAIN LIGHTNING ARRESTER

1.	Name of the Manufacturer	: LAMCO INDUSTRIES PRIVATE LIMITED. H.O & WORKS: SANATHNAGAR-IE,HYD WORKS: AUTOMOTIVE PARK,TSIIC, MUPPIREDDYPALLY,T.S,INDIA.
2.	Type	: Station High Class Metal Oxide Gapless Lightning Arresters "MORESTER' Type-SH, MODEL- 'LMAS'
3.	Reference Standard	: IEC 60099-4 of 2014.
4.	Model (Drg. No.)	: 2211216
5.	No. of Units	: TWO
6.	Rated Voltage	: 120 kV
7.	Nominal discharge current	: 20 kA
8.	Reference current	: 4 mA
9.	Reference voltage	: Greater than the rated Arrester voltage at reference current
10.	Leakage Current at COV	: Less than 0.8 mA
11.	Max. continuous operating voltage	: ~~84~~ 102 kVrms
12.	Maximum residual voltage for discharge current of (8/20 micro sec. wave)	
	i) 10000 Amps	: 320 kVpeak
	ii) 20000 Amps	: 340 kVpeak
	iii) 40000 Amps	: 380 kVpeak
13.	Max. steep front residual voltage at 10KA with one micro sec. rise time	: 380 kVpeak
14.	Max. switching impulse residual voltage with 40/80 us. wave at 1000 A	: 272 kVpeak
15.	Energy dissipation capability (Cumulative of 3 Sequential Operations)	: 12 KJ/KV
16.	High current 4/10 us wave test value (as specified)	: 100 kApeak

APPROVED
Subject to the condition that you are not absolved of the responsibility for correctness of the materials supplied as per specification

Electrical Superintending Engineer
(Planning and Engineering)
Bihar State Power Transmission Company Limited
Vidyut Bhawan, Patna-800021

Continued on page...2

(2211216)

G.T.P 120 kV 20kA L.A's

17. Pressure relief class : Class 'A'

18. Short circuit current capability : 40 kArms

19. Partial discharge at 1.05 times MCOV : Less than 10 pC

20. Temporary over voltage withstand value for
    a) 0.1 Second : 144 kVrms
    b) 1.0 Second : 138 kVrms
    c) 10.0 Second : 132 kVrms

21. Insulation withstand strength of Arrester housing
    i) One minute 50 Hz dry & wet : 275 kVrms
    ii) Lightning impulse voltage withstand: 650 kVpeak

22. Creepage distance (Nominal) : ~~3625~~ mm 4500 (as per TTR)

23. Weight of complete Arrester Kgs : 117 ±10%

24. Height of the Arrester : Refer Drg No. 2211216

25. Minimum recommended centre to centre spacing between Arresters mm : 2000

26. Clearance required from ground equipment at various heights of Arrester unit mm : 1700

27. Earthing arrangement provided for earthing side of Arrester : Ground Terminal Bracket provided for connecting earth strip (Drg.6220154)

28. Mounting flange dimensional details : End castings, 3 holes 12.5mm Ø 120°apart at 250 mm PCD.

for **LAMCO INDUSTRIES PRIVATE LIMITED.**

(K.ARUN)
SENIOR MANAGER (D&D)

APPROVED
Subject to the condition that you are not absolved of the responsibility for correctness of the materials supplied as per specification.
Electrical Superintending Engineer
(Planning and Engineering)
Bihar State Power Transmission Company Limited
Vidyut Bhawan, Patna-800021

31/5/24

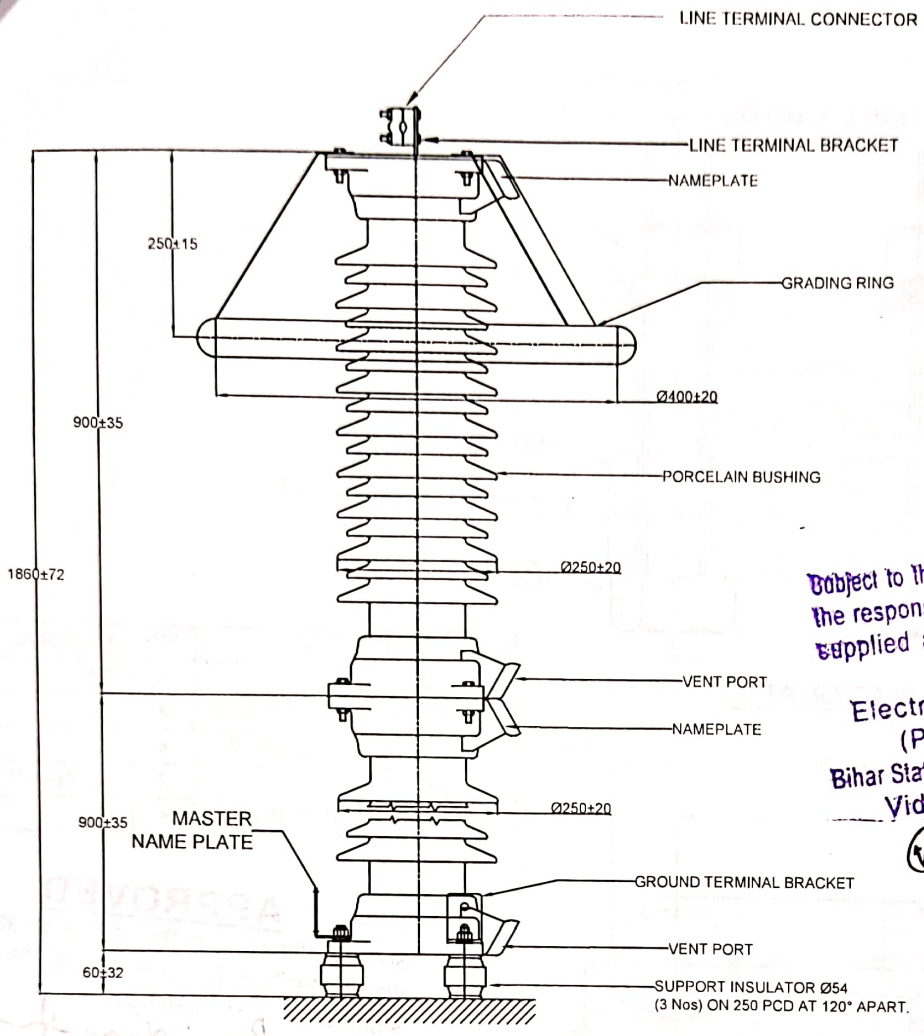

APPROVED
Subject to the condition that you are not absolved of the responsibility for correctness of the materials supplied as per specification
Electrical Superintending Enginer
(Planning and Engineering)
Bihar State Power Transmission Company Limited
Vidyut Bhawan, Patna-800021
31/5/24

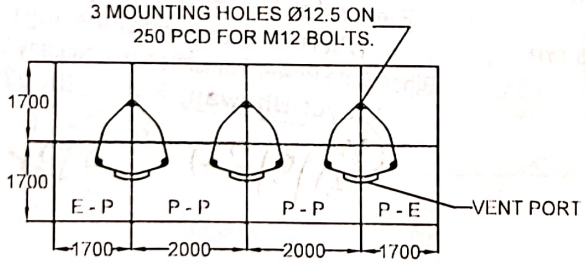

3 PHASE INSTALLATION

NOTE :
1. FOR SURGE MONITOR REFER Drg. No. : 4249001A.
2. FOR INSTALLATION AND INTERCONNECTION REFER Drg. No. : 4320010.
3. TOTAL CREEPAGE DISTANCE ~~3625 mm~~ (NOM). 4500 (as per TTR)
4. ARRESTER VENT PORTS SHOULD BE DIRECTED TOWARDS SAFE DIRECTION.
5. WEIGHT OF THE ARRESTER 117±10%Kgs.

REV. No.	BREIF DESCRIPTION			SIGNATURE	DATE
LAMCO INDUSTRIES PRIVATE LIMITED. H.O & WORKS: SANATHNAGAR-IE,HYD WORKS: AUTOMOTIVE PARK,TSIIC, MUPPIREDDYPALLY,T.S,INDIA.	TOLERANCE AS INDICATED	PROJECTION	DRAWN		29.01.2024
			CHECKED		29.01.2024
	ALL DIMENSIONS ARE IN mm	SCALE : NTS	APPROVED		29.01.2024

TITLE :	DRAWING NUMBER	ISSUE - 1
120kV, 20kA LIGHTNING ARRESTER (MORESTER TYPE-SH, MODEL- LMAS)	2211216	REV - 0

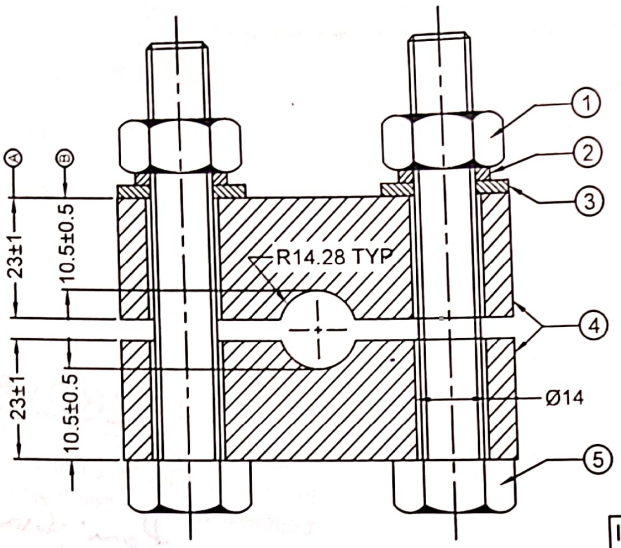

SECTION AT 'XX'

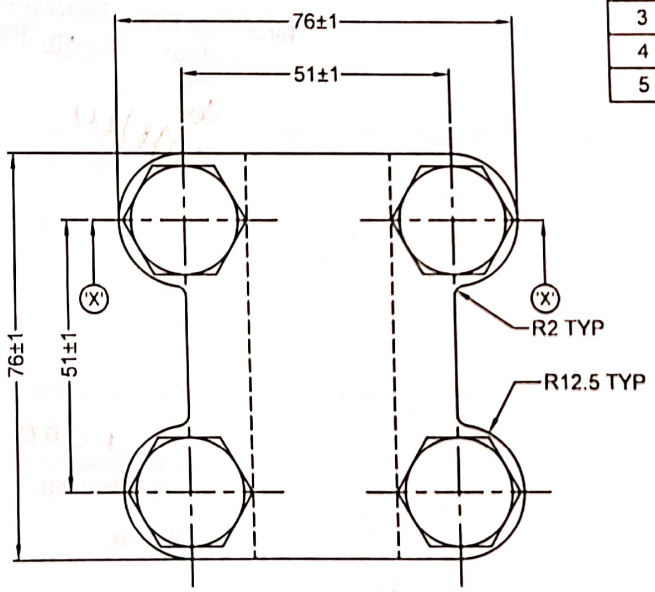

IT No.	DESCRIPTION	QTY	MATERIAL
1	M12 NUT	4	G.I.
2	M12 SPRING WASHER	4	G.I.
3	M12 PLAIN WASHER	4	G.I.
4	CLAMP	2	AL. ALLOY
5	M12 × 75 HEX. BOLT	4	G.I.

APPROVED
Subject to the condition that you are not absolved of the responsibility for correctness of the materials supplied as per specification
Ravi Chandra
Electrical Superintending Enginer
(Planning and Engineering)
Bihar State Power Transmission Company Limited
Vidyut Bhawan, Patna-800021
31/5/24

NOTE :
WEIGHT : 750 Grams ±10%

REV. No.	BREIF DESCRIPTION			SIGNATURE	DATE
LAMCO INDUSTRIES PRIVATE LIMITED. H.O & WORKS: SANATHNAGAR-IE,HYD WORKS: AUTOMOTIVE PARK,TSIIC, MUPPIREDDYPALLY,T.S,INDIA.	TOLERANCE AS INDICATED	PROJECTION	DRAWN	Badar	29.01.2024
			CHECKED		29.01.2024
	ALL DIMENSIONS ARE IN mm	SCALE : NTS	APPROVED		29.01.2024

TITLE :	DRAWING NUMBER	ISSUE - 1
LINE TERMINAL CONNECTOR SUITABLE FOR SINGLE ACSR MOOSE CONDUCTOR (Ø31.775)	6220951	REV - 0

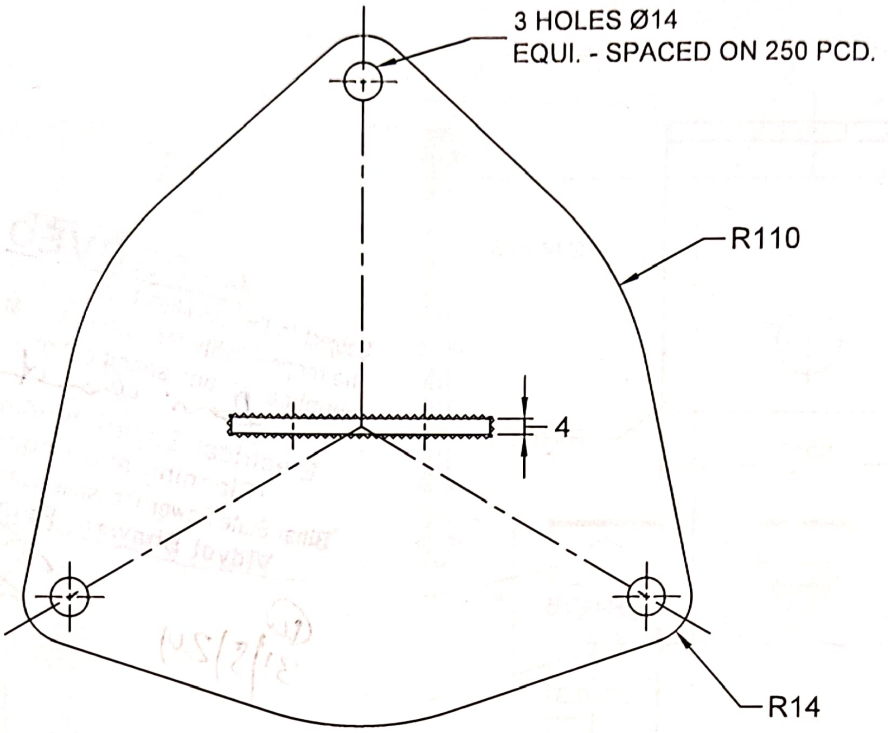

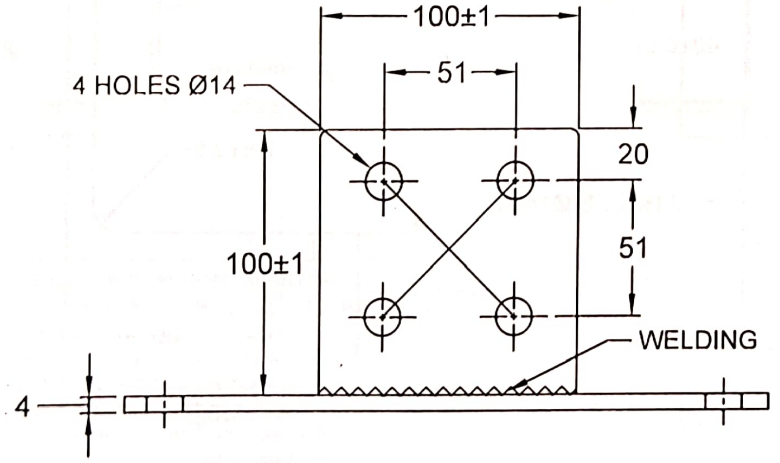

APPROVED

Subject to the condition that you are not absolved of the responsibility for correctness of the materials supplied as per specification

Electrical Superintending Engineer
(Planning and Engineering)
Bihar State Power Transmission Company Limited
Vidyut Bhawan, Patna-800021

31/5/24

NOTES :

1. MATERIAL : 4mm THICK M.S. SHEET.
2. FINISH : HOT DIP GALVANISED.
3. ALL HOLES Ø14 SIZE, UNLESS OTHER WISE SPECIFIED.
4. WEIGHT : 1.7 Kgs ±10%

REV. No.	BREIF DESCRIPTION			SIGNATURE	DATE
LAMCO INDUSTRIES PRIVATE LIMITED. H.O & WORKS: SANATHNAGAR-IE,HYD WORKS: AUTOMOTIVE PARK,TSIIC, MUPPIREDDYPALLY,T.S,INDIA.	TOLERANCE AS INDICATED	PROJECTION	DRAWN		29.01.2024
			CHECKED		29.01.2024
	ALL DIMENSIONS ARE IN mm	SCALE : NTS	APPROVED		29.01.2024

TITLE :	DRAWING NUMBER	ISSUE - 1
LINE TERMINAL BRACKET	6220150D	REV - 0

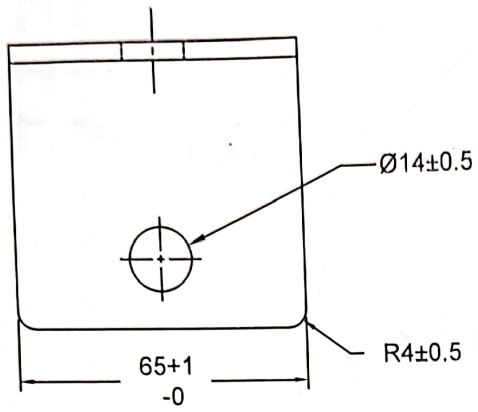

APPROVED
Subject to the condition that you are not absolved of the responsibility for correctness of the materials supplied as per specification.
Electrical Superintending Engineer
(Planning and Engineering)
Bihar State Power Transmission Company Limited
Vidyut Bhawan, Patna-800021
31/5/24

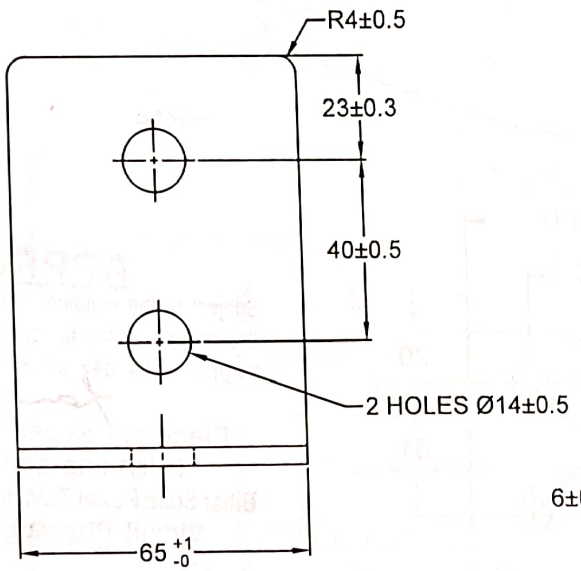

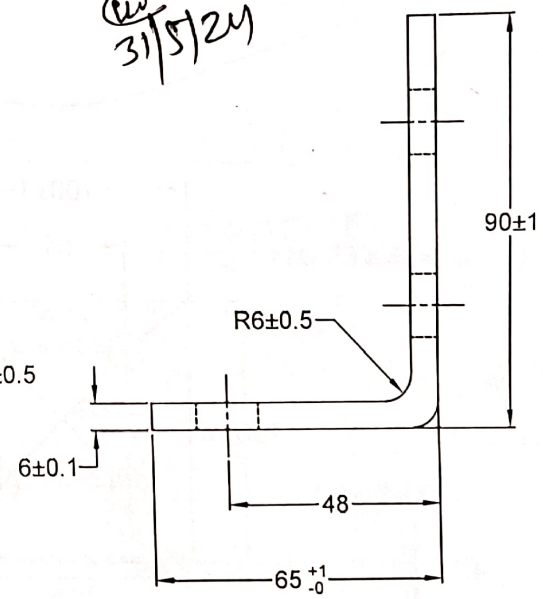

NOTE :
1. MATERIAL : M.S.PLATE.
2. FINISH : HOT DIP GALVANISED.
3. WEIGHT : 400 gms.±10%

REV. No.	BREIF DESCRIPTION			SIGNATURE	DATE
LAMCO INDUSTRIES PRIVATE LIMITED. H.O & WORKS: SANATHNAGAR-IE,HYD WORKS: AUTOMOTIVE PARK,TSIIC, MUPPIREDDYPALLY,T.S,INDIA.	TOLERANCE AS INDICATED	PROJECTION	DRAWN		29.01.2024
			CHECKED		29.01.2024
	ALL DIMENSIONS ARE IN mm	SCALE : NTS	APPROVED		29.01.2024

TITLE : GROUND TERMINAL BRACKET

DRAWING NUMBER 6220154

ISSUE - 1
REV - 0

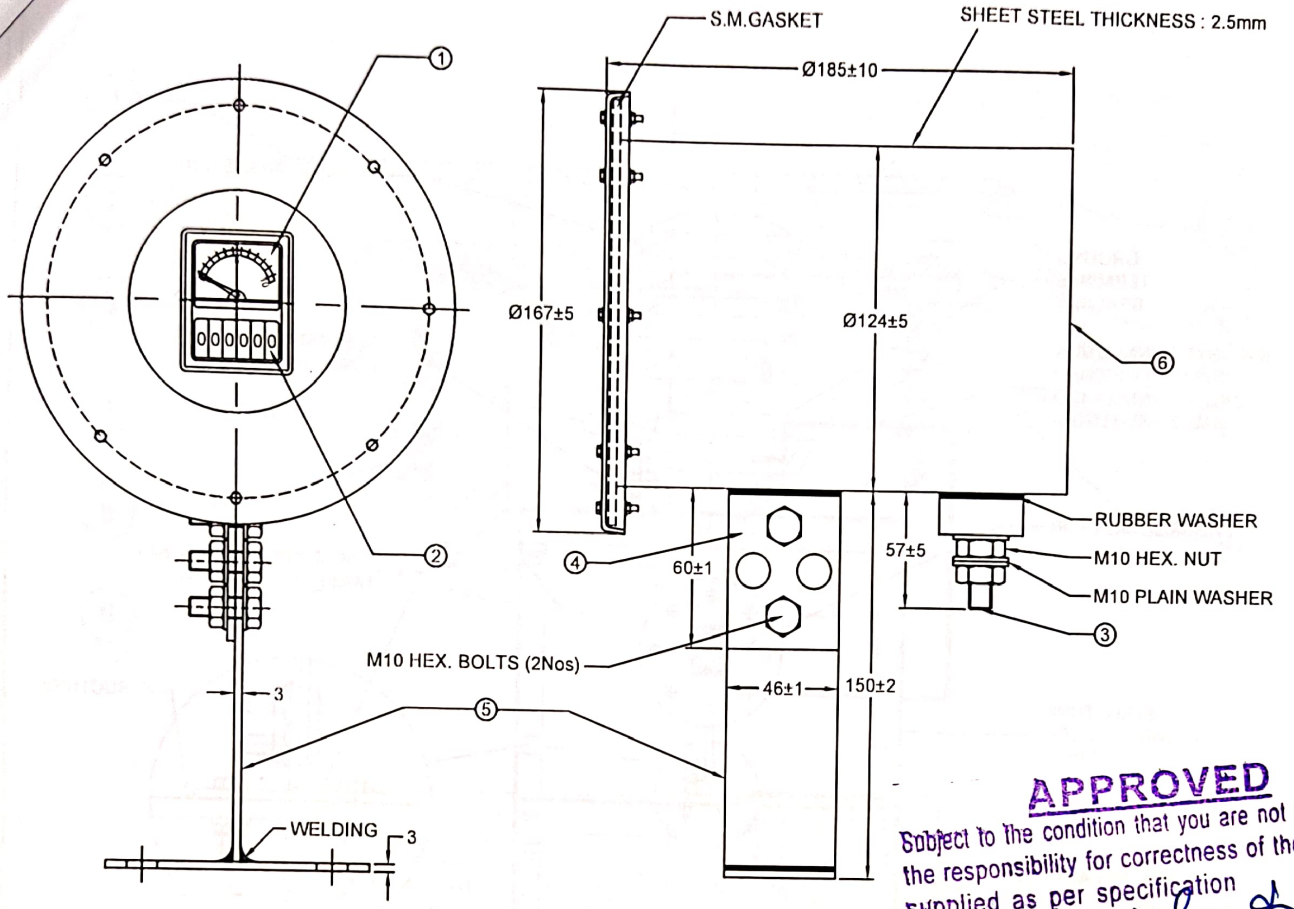

APPROVED
Subject to the condition that you are not absolved of the responsibility for correctness of the materials supplied as per specification
Electrical Superintending Engineer
(Planning and Engineering)
Bihar State Power Transmission Company Limited
Vidyut Bhawan, Patna-800021
31/5/24

1. LEAKAGE CURRENT MONITOR.
2. SURGE COUNTER, CYCLOMETRIC TYPE.
3. LINE TERMINAL.
4. S.M. - STRIP (EARTH TERMINAL).
5. S.M. - MOUNTING BRACKET.
6. HOT DIP GALVANISED S.M. - BOX.
   a) 0 - 6 mA (HEALTHY) GREEN ZONE
   b) 6 - 10 mA (DANGER) RED ZONE

NOTE :

* DEGREE OF PROTECTION : IP - 67
* SEALANT APPLIED AT GASKETS
* STANDARD : IS / IEC 60947-1 : 2004
* GASKET DETAILS:
  MATERIAL : NEOPRENE RUBBER.
  SIZE : OD-161mm, ID-125mm, Thick-5mm.
  CROSS SECTION VIEW OF GASKET Ref. Drg. No.4250002
  WEIGHT : 2.8Kgs ± 10%.

REV. No.	BREIF DESCRIPTION			SIGNATURE	DATE
LAMCO INDUSTRIES PRIVATE LIMITED. H.O & WORKS: SANATHNAGAR-IE,HYD WORKS: AUTOMOTIVE PARK,TSIIC, MUPPIREDDYPALLY,T.S,INDIA.	TOLERANCE AS INDICATED	PROJECTION	DRAWN		29.01.2024
			CHECKED		29.01.2024
	ALL DIMENSIONS ARE IN mm	SCALE : NTS	APPROVED		29.01.2024

TITLE :

SURGE MONITOR G.A.

DRAWING NUMBER 4249001A

ISSUE - 1

REV - 0

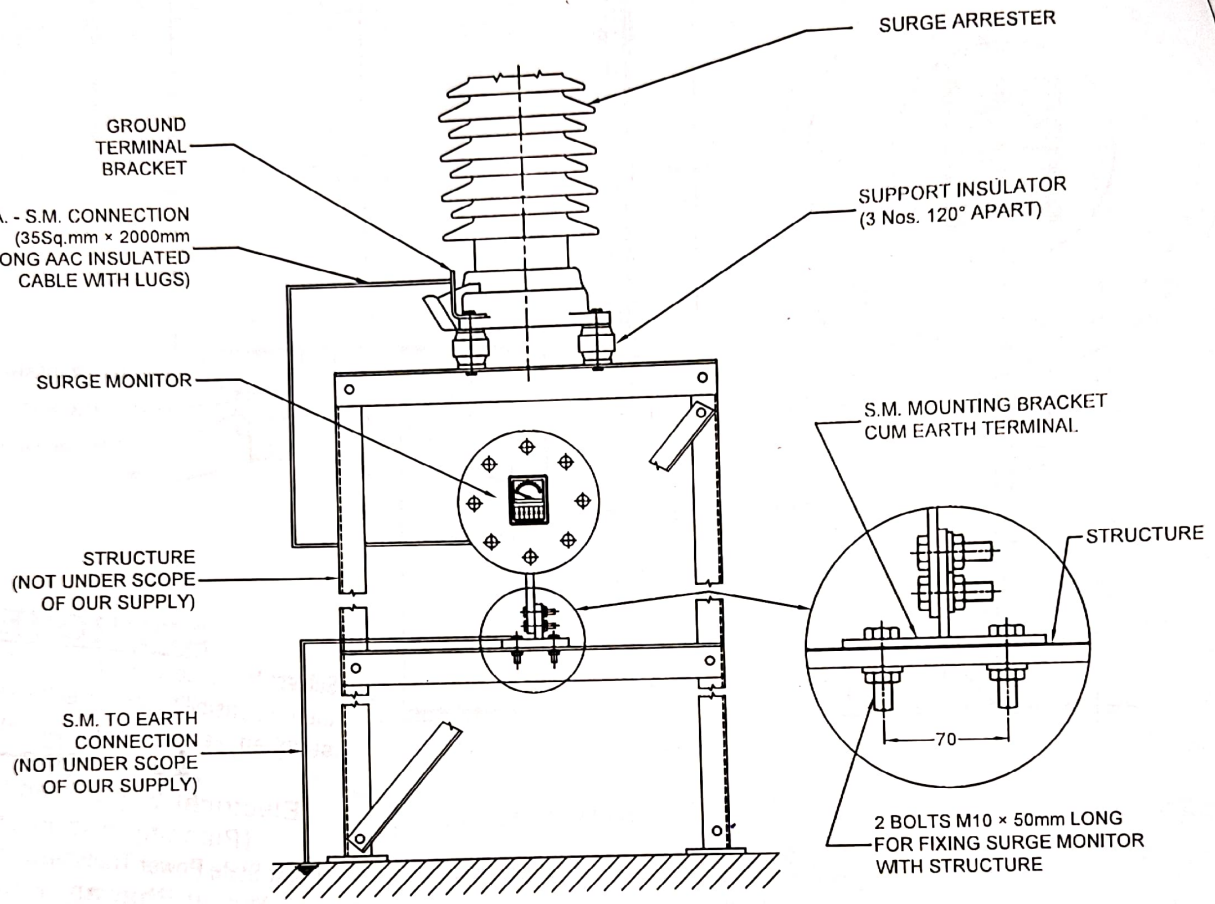

APPROVED
Subject to the condition that you are not absolved of the responsibility for correctness of the materials supplied as per specification
Electrical Superintending Engineer
(Planning and Engineering)
Bihar State Power Transmission Company Limited
Vidyut Bhawan, Patna-800021
31/5/24

REV. No.	BREIF DESCRIPTION			SIGNATURE	DATE
LAMCO INDUSTRIES PRIVATE LIMITED. H.O & WORKS: SANATHNAGAR-IE,HYD WORKS: AUTOMOTIVE PARK,TSIIC, MUPPIREDDYPALLY,T.S,INDIA.	TOLERANCE AS INDICATED	PROJECTION	DRAWN		29.01.2024
			CHECKED		29.01.2024
	ALL DIMENSIONS ARE IN mm	SCALE : NTS	APPROVED		29.01.2024

TITLE : METHOD OF CONNECTING SURGE MONITOR WITH SURGE ARRESTER

DRAWING NUMBER 4320010

ISSUE - 1
REV - 0

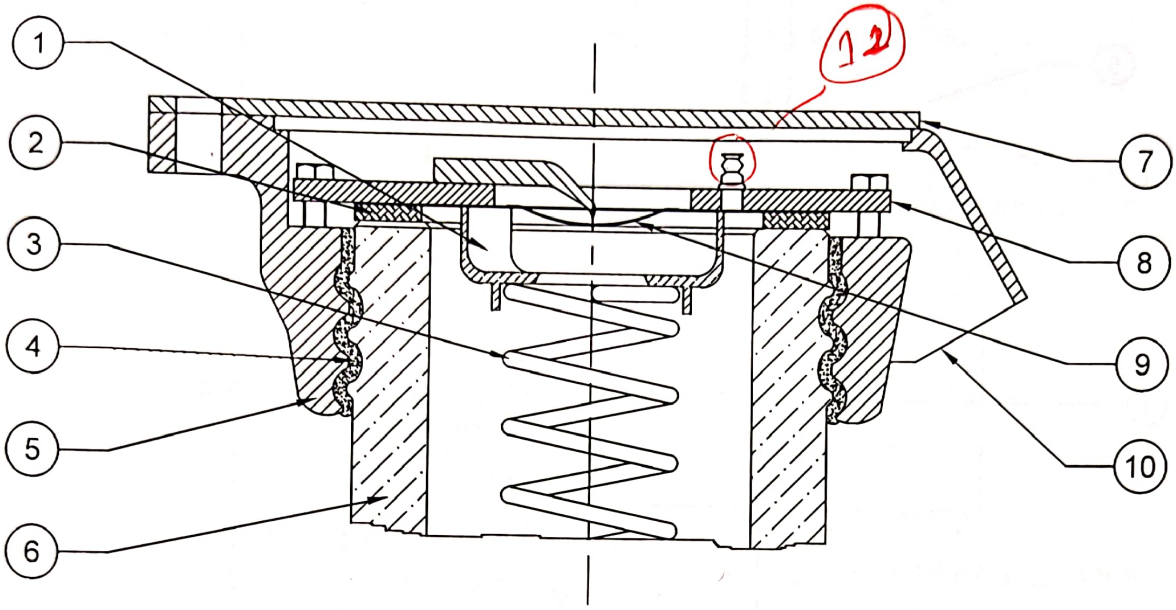

S.No.	ITEM	MATERIAL
1.	SP. SUPPORT.	ALUMINUM
2.	RUBBER GASKET.	NEOPRENE ,5mm THICK
3.	SPRING.	SPRING STEEL
4.	SULPHUR CEMENT.	SULPHUR CEMENT
5.	CASTING.	ALUMINIUM (LM-6)
6.	BUSHING.	PORCELAIN
7.	END COVER PLATE.	ALUMINIUM
8.	COVER PLATE.	M.S (HOT DIP GALVANIZED)
9.	PRESSURE RELIEF DIAPHRAGM.	BRASS
10.	VENT PORT.	ALUMINIUM

(11) gas filling tube - copper
(12) fuse wire - copper
(13) Line terminal bracket - copper

(as corrected)

APPROVED
Subject to the condition that you are not absolved of the responsibility for correctness of the materials supplied as per specification
Electrical Superintending Engineer
(Planning and Engineering)
Bihar State Power Transmission Company Limited
Vidyut Bhawan, Patna-800021
31/5/24

REV. No.	BREIF DESCRIPTION			SIGNATURE	DATE
LAMCO INDUSTRIES PRIVATE LIMITED. H.O & WORKS: SANATHNAGAR-IE,HYD WORKS: AUTOMOTIVE PARK,TSIIC, MUPPIREDDYPALLY,T.S,INDIA.	TOLERANCE AS INDICATED	PROJECTION	DRAWN		29.01.2024
			CHECKED		29.01.2024
	ALL DIMENSIONS ARE IN mm	SCALE : NTS	APPROVED		29.01.2024

TITLE :	DRAWING NUMBER	ISSUE - 1
PRESSURE RELIEF AND SEALING ARRANGEMENT OF MORESTER	4220041	REV - 0

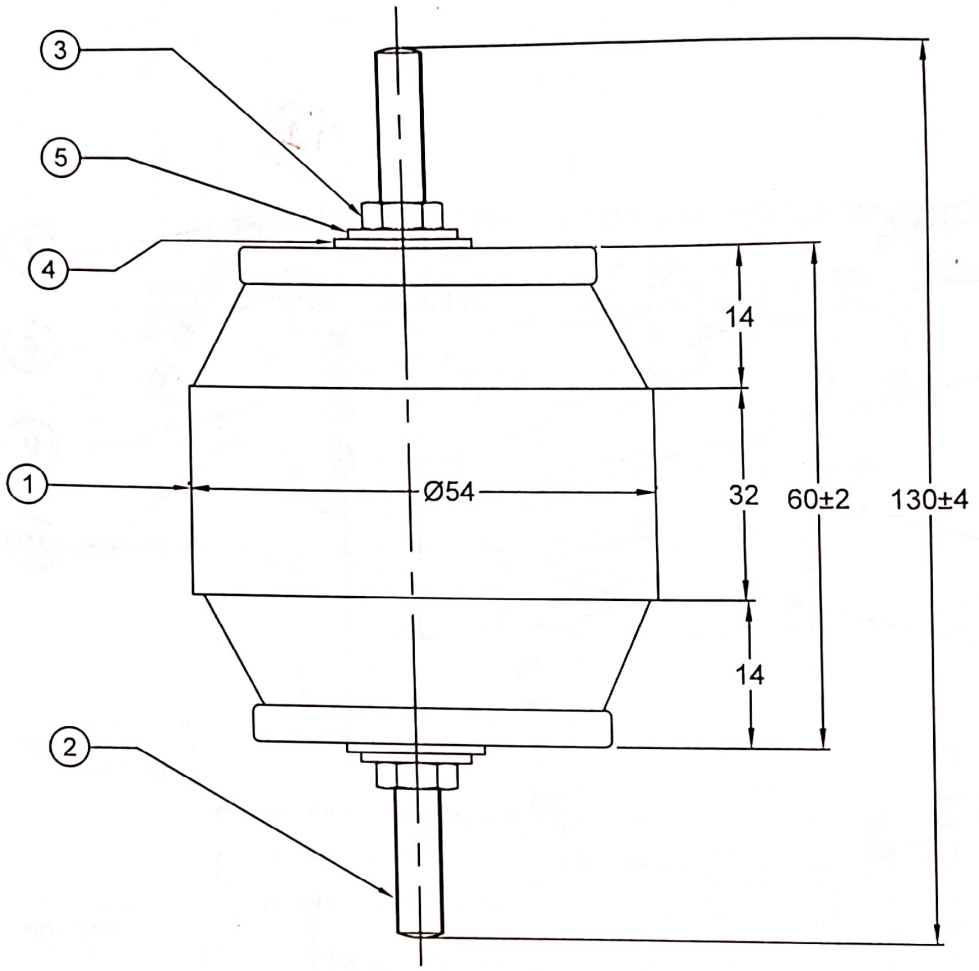

ITEM	DESRCIPTION	MATERIAL	QTY.
5	SPRING WASHER M12	S.S.	2
4	PLAIN WASHER M12	S.S.	2
3	NUT M12	S.S.	2
2	STUD M12	S.S.	2
1	INSULATOR	POLYMER	1

NOTE :
1. MATERIAL : POLYMER
2. HARDWARE : S.S
3. WEIGHT : 250 Grms±10%

APPROVED
Subject to the condition that you are not absolved of the responsibility for correctness of the materials supplied as per specification
Electrical Superintending Enginer
(Planning and Engineering)
Bihar State Power Transmission Company Limited
Vidyut Bhawan, Patna-800021
31/1/24

REV. No.	BRIEF DESCRIPTION	SIGNATURE	DATE

LAMCO INDUSTRIES PRIVATE LIMITED.
H.O & WORKS: SANATHNAGAR-IE,HYD
WORKS: AUTOMOTIVE PARK,TSIIC,
MUPPIREDDYPALLY,T.S,INDIA.

TOLERANCE AS INDICATED	PROJECTION	DRAWN		29.01.2024
		CHECKED		29.01.2024
ALL DIMENSIONS ARE IN mm	SCALE : NTS	APPROVED		29.01.2024

TITLE : SUPPORT INSULATOR - Ø54
MODEL IB-14

DRAWING NUMBER 6221036
ISSUE - 1
REV - 0

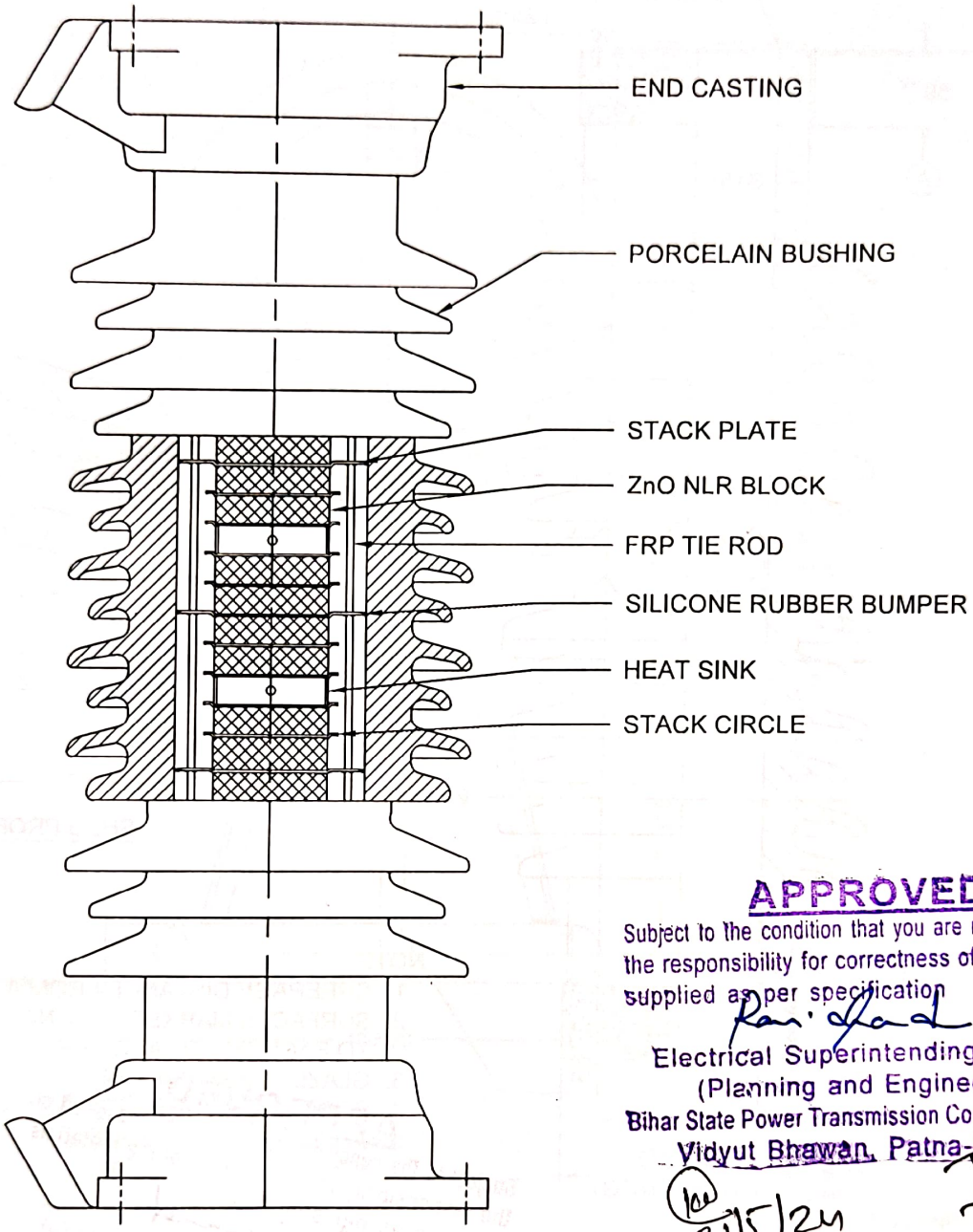

APPROVED
Subject to the condition that you are not absolved of the responsibility for correctness of the materials supplied as per specification
Electrical Superintending Engineer
(Planning and Engineering)
Bihar State Power Transmission Company Limited
Vidyut Bhawan, Patna-800021
31/5/24

REV. No.	BREIF DESCRIPTION			SIGNATURE	DATE
LAMCO INDUSTRIES PRIVATE LIMITED. H.O & WORKS: SANATHNAGAR-IE,HYD WORKS: AUTOMOTIVE PARK,TSIIC, MUPPIREDDYPALLY,T.S,INDIA.	TOLERANCE AS INDICATED	PROJECTION	DRAWN		29.01.2024
			CHECKED		29.01.2024
	ALL DIMENSIONS ARE IN mm	SCALE : NTS	APPROVED		29.01.2024
TITLE : SECTIONAL VIEW OF MORESTER			DRAWING NUMBER 4220200		ISSUE - 1 REV - 0

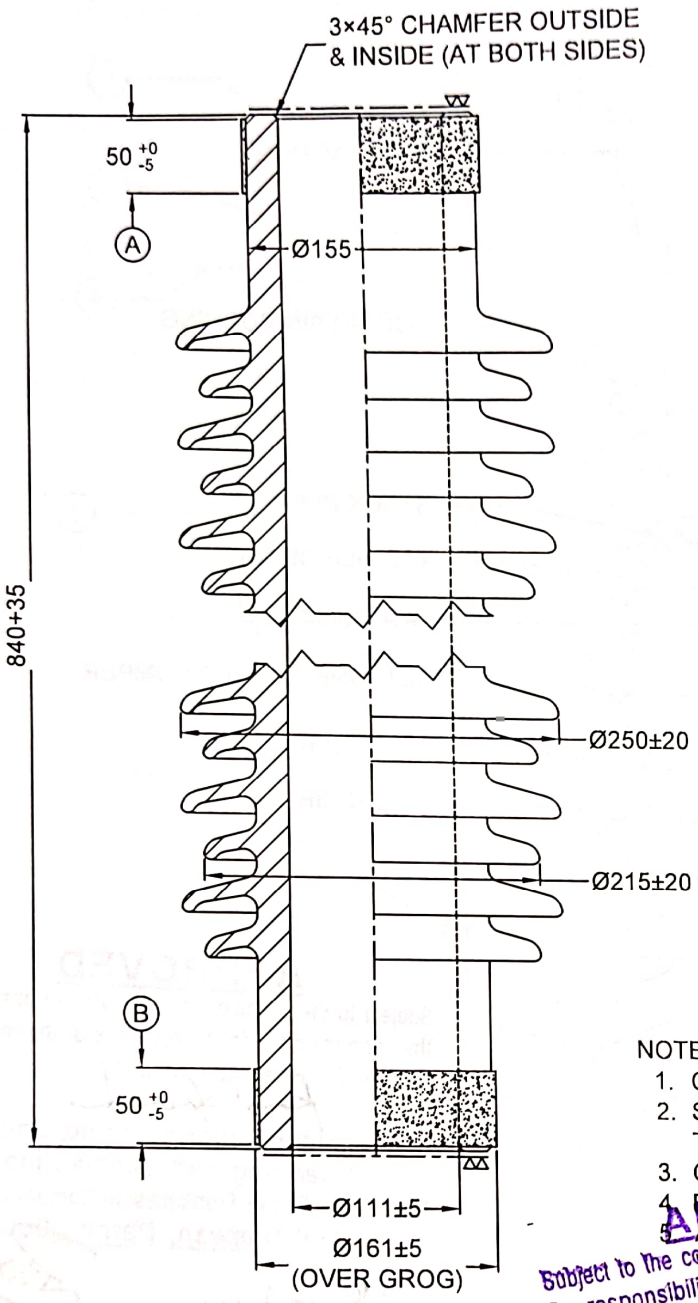

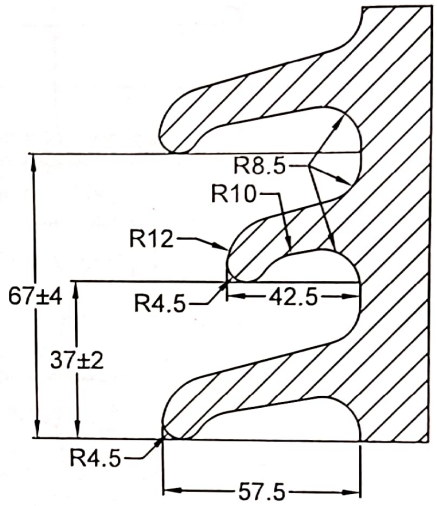

SHED PROFILE

NOTE :

1. CREEPAGE DISTANCE FROM A TO B 1850 (MIN).
2. SURFACES MARKED ' ∇ ' UNGLAZED, PARALLEL TO EACH OTHER AND PERPENDICULAR TO AXIS.
3. GLAZE : DARK BROWN.
4. BORE SHOULD BE STRAIGHT AND UNIFORM DIA.
5. APPLICABLE STANDARD : IS : 5621-1980

WEIGHT : 40±10 %Kgs.

APPROVED
Subject to the condition that we are not absolved of the responsibility for correctness of the material supplied as per specification
Electrical Superintending Enginer
(Planning and Engineering)
Bihar State Power Transmission Company Limited
Vidyut Bhawan, Patna-800021
31/5/24

REV. No.	BREIF DESCRIPTION	SIGNATURE	DATE

LAMCO INDUSTRIES PRIVATE LIMITED.
H.O & WORKS: SANATHNAGAR-IE,HYD
WORKS: AUTOMOTIVE PARK,TSIIC,
MUPPIREDDYPALLY,T.S,INDIA.

TOLERANCE AS INDICATED	PROJECTION	DRAWN		29.01.2024
		CHECKED		29.01.2024
ALL DIMENSIONS ARE IN mm	SCALE : NTS	APPROVED		29.01.2024

TITLE :

PORCELAIN BUSHING

DRAWING NUMBER	ISSUE - 1
6220008	REV - 0

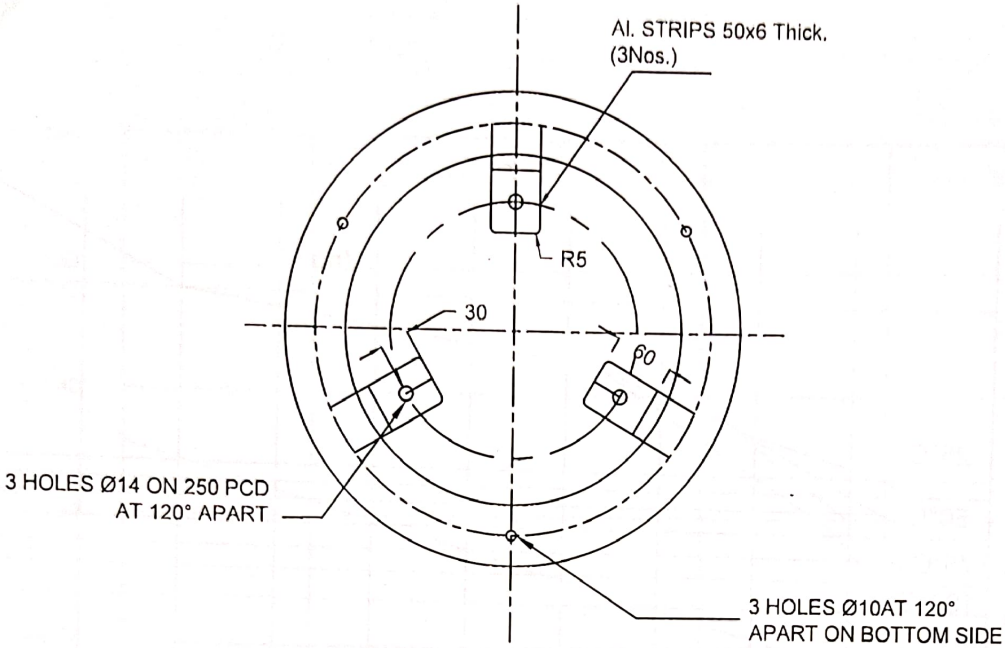

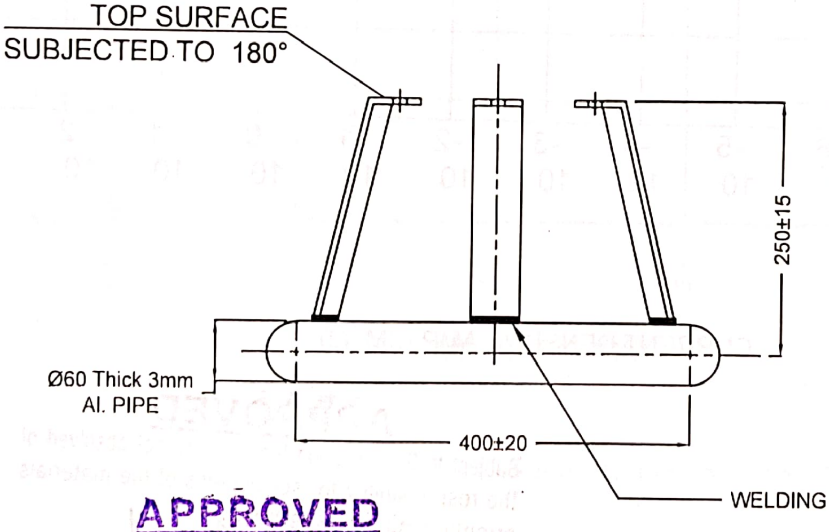

APPROVED
Subject to the condition that you are not absolved of the responsibility for correctness of the materials supplied as per specification
Electrical Superintending Engineer
(Planning and Engineering)
Bihar State Power Transmission Company Limited
Vidyut Bhawan, Patna-800021
31/5/24

NOTE :
* MATERIAL : ALUMINIUM
* FINISH : BUFFING
* SCRATCHES & SHARP CORNERS SHOULD BE NOT ALLOWED
* WEIGHT : 2.8 Kg's ±10%

REV. No.	BREIF DESCRIPTION	SIGNATURE	DATE

LAMCO INDUSTRIES PRIVATE LIMITED. H.O & WORKS: SANATHNAGAR-IE,HYD WORKS: AUTOMOTIVE PARK,TSIIC, MUPPIREDDYPALLY,T.S,INDIA.	TOLERANCE AS INDICATED	PROJECTION	DRAWN		29.01.2024
			CHECKED		29.01.2024
	ALL DIMENSIONS ARE IN mm	SCALE : NTS	APPROVED		29.01.2024

TITLE :	DRAWING NUMBER	ISSUE - 1
GRADING RING - Ø400, Ht. 250mm	6221038	REV - 0

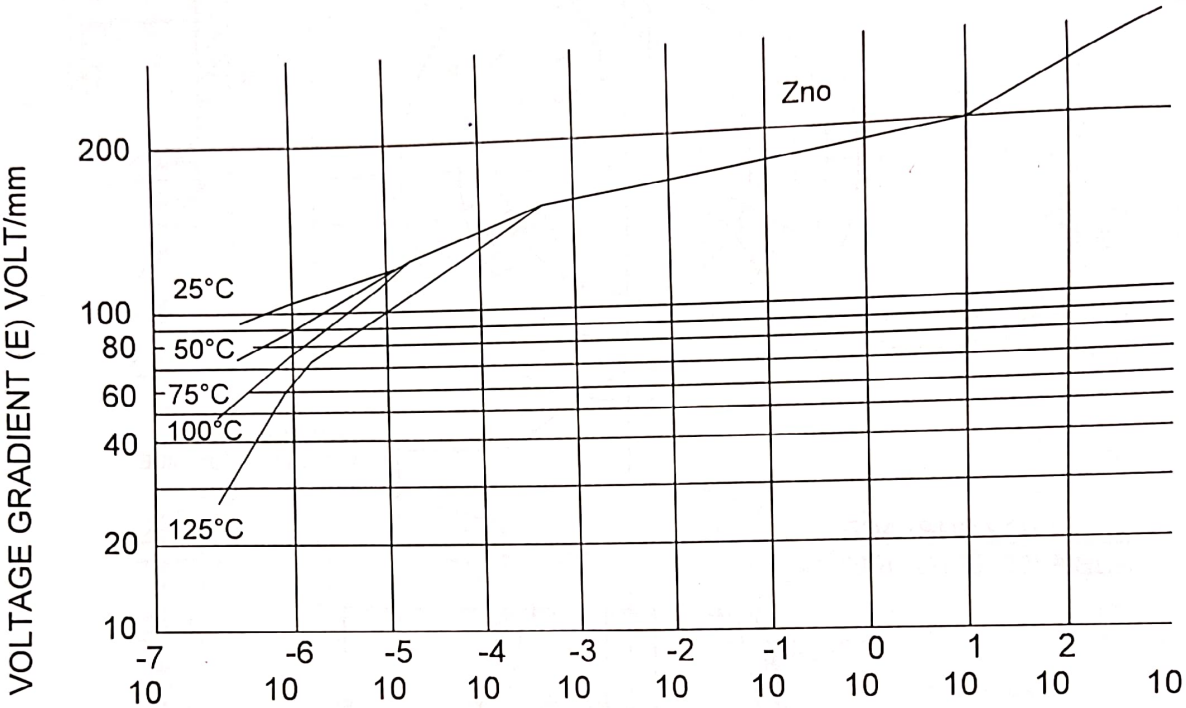

APPROVED
Subject to the condition that you are not absolved of the responsibility for correctness of the materials supplied as per specification
Electrical Superintending Engineer
(Planning and Engineering)
Bihar State Power Transmission Company Limited
Vidyut Bhawan, Patna-800021
31/5/24

REV. No.	BREIF DESCRIPTION			SIGNATURE	DATE
LAMCO INDUSTRIES PRIVATE LIMITED. H.O & WORKS: SANATHNAGAR-IE,HYD WORKS: AUTOMOTIVE PARK,TSIIC, MUPPIREDDYPALLY,T.S,INDIA.	TOLERANCE AS INDICATED	PROJECTION	DRAWN		29.01.2024
			CHECKED		29.01.2024
	ALL DIMENSIONS ARE IN mm	SCALE : NTS	APPROVED		29.01.2024

TITLE :	DRAWING NUMBER	ISSUE - 1
CHARACTERISTIC CURVES OF ZnO ELEMENTS	8221010	REV - 0

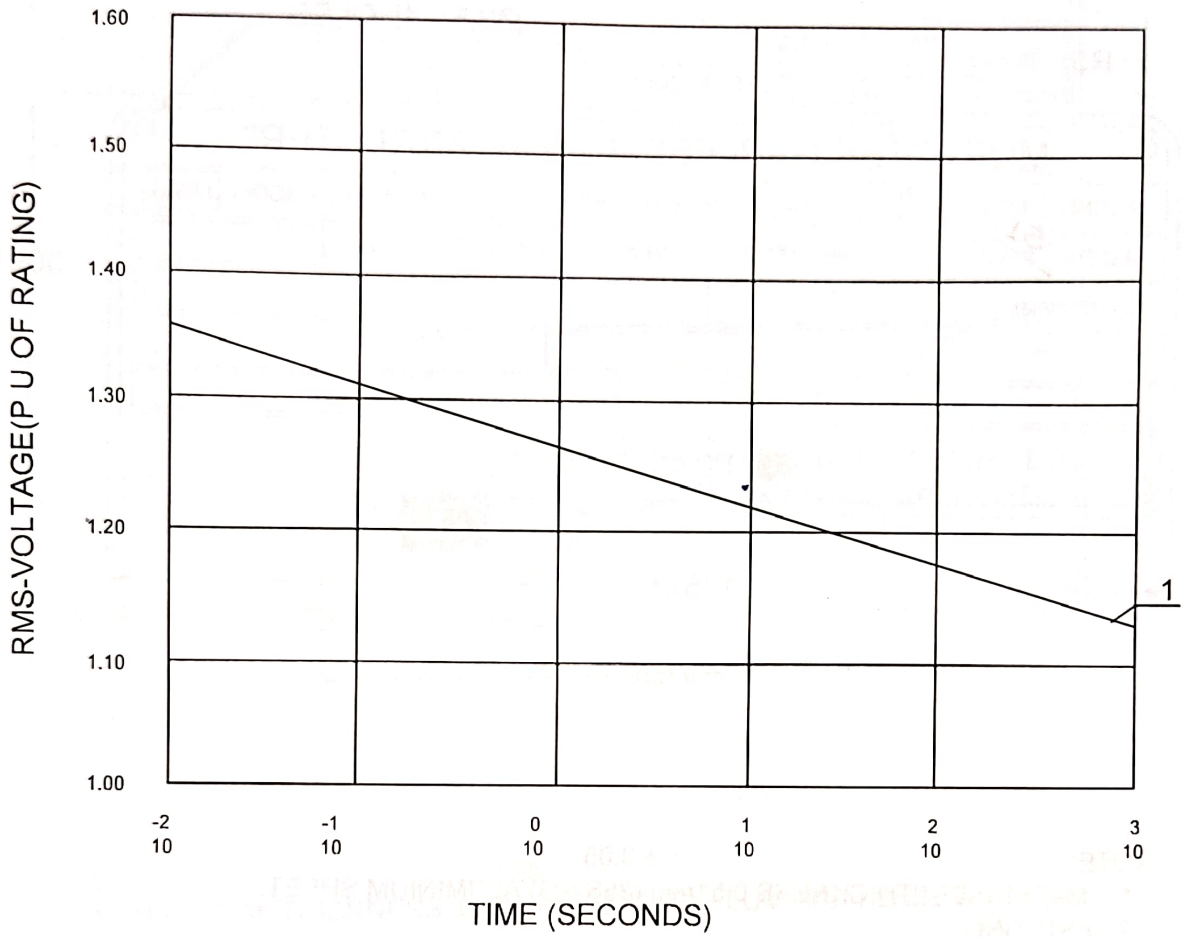

1) TOV CAPABILITY WITHOUT ENERGY ABSORPTION

APPROVED
Subject to the condition that you are not absolved of the responsibility for correctness of the materials supplied as per specification
Electrical Superintending Enginer
(Planning and Engineering)
Bihar State Power Transmission Company Limited
Vidyut Bhawan, Patna-800021

REV. No.	BREIF DESCRIPTION			SIGNATURE	DATE
LAMCO INDUSTRIES PRIVATE LIMITED. H.O & WORKS: SANATHNAGAR-IE,HYD WORKS: AUTOMOTIVE PARK,TSIIC, MUPPIREDDYPALLY,T.S,INDIA.	TOLERANCE AS INDICATED	PROJECTION	DRAWN	Bailey	29.01.2024
			CHECKED		29.01.2024
	ALL DIMENSIONS ARE IN mm	SCALE : NTS	APPROVED		29.01.2024
TITLE : POWER FREQUENCY VOLTAGE Vs TIME CHARACTERISTICS (20KA)			DRAWING NUMBER 8221019A		ISSUE - 1 REV - 0

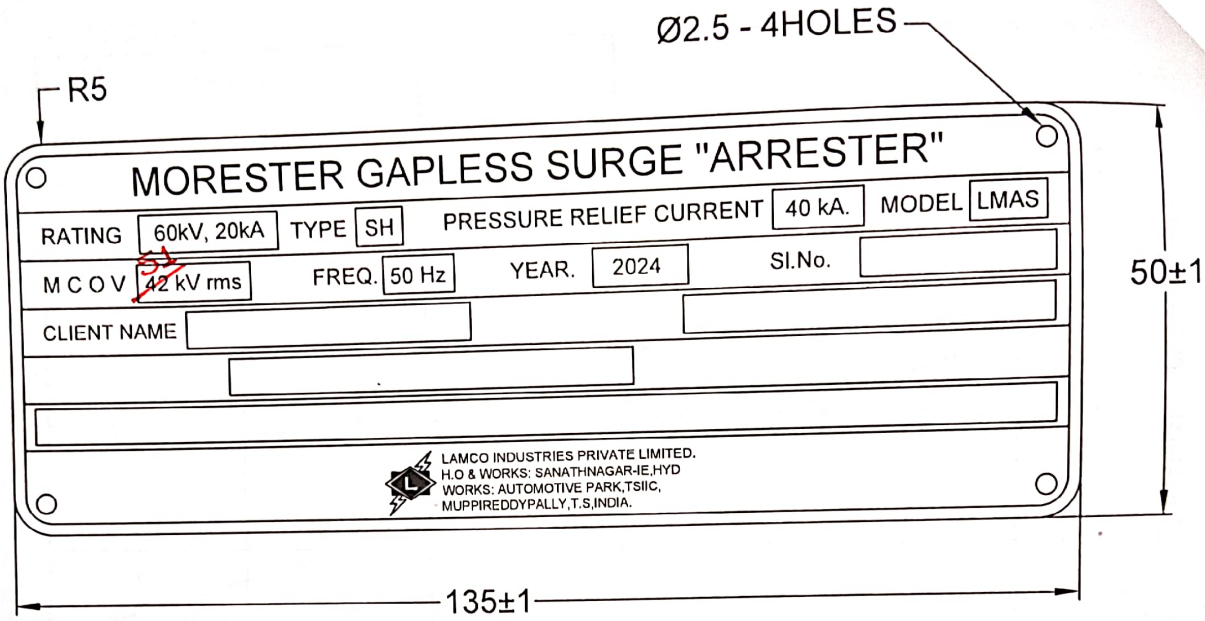

NOTE: ± 0.05

1. MATERIAL : THICKNESS 0.51mm (25SWG) ALUMINIUM SHEET.
2. PRINTING :
   a. BORDER LINE AND LETTERS WITH ON BLACK BACKGROUND.
   b. LETTER 'L' IN MONOGRAM IS BLACK ON WHITE BACK GROUND.
   c. RECTANGULAR BLANKS WHITE, LETTERS BLACK.
   d. LETTERS TO BE ETCHED.

(as corrected)

APPROVED
Subject to the condition that you are not absolved of the responsibility for correctness of the materials supplied as per specification
Electrical Superintending Enginer
(Planning and Engineering)
Bihar State Power Transmission Company Limited
Vidyut Bhawan, Patna-800021

REV. No.	BREIF DESCRIPTION			SIGNATURE	DATE
LAMCO INDUSTRIES PRIVATE LIMITED. H.O & WORKS: SANATHNAGAR-IE,HYD WORKS: AUTOMOTIVE PARK,TSIIC, MUPPIREDDYPALLY,T.S,INDIA.	TOLERANCE AS INDICATED	PROJECTION	DRAWN		29.01.2024
			CHECKED		29.01.2024
	ALL DIMENSIONS ARE IN mm	SCALE : NTS	APPROVED		29.01.2024

TITLE : GENERAL NAME PLATE MORESTER

DRAWING NUMBER 8004401 | ISSUE - 1 | REV - 0

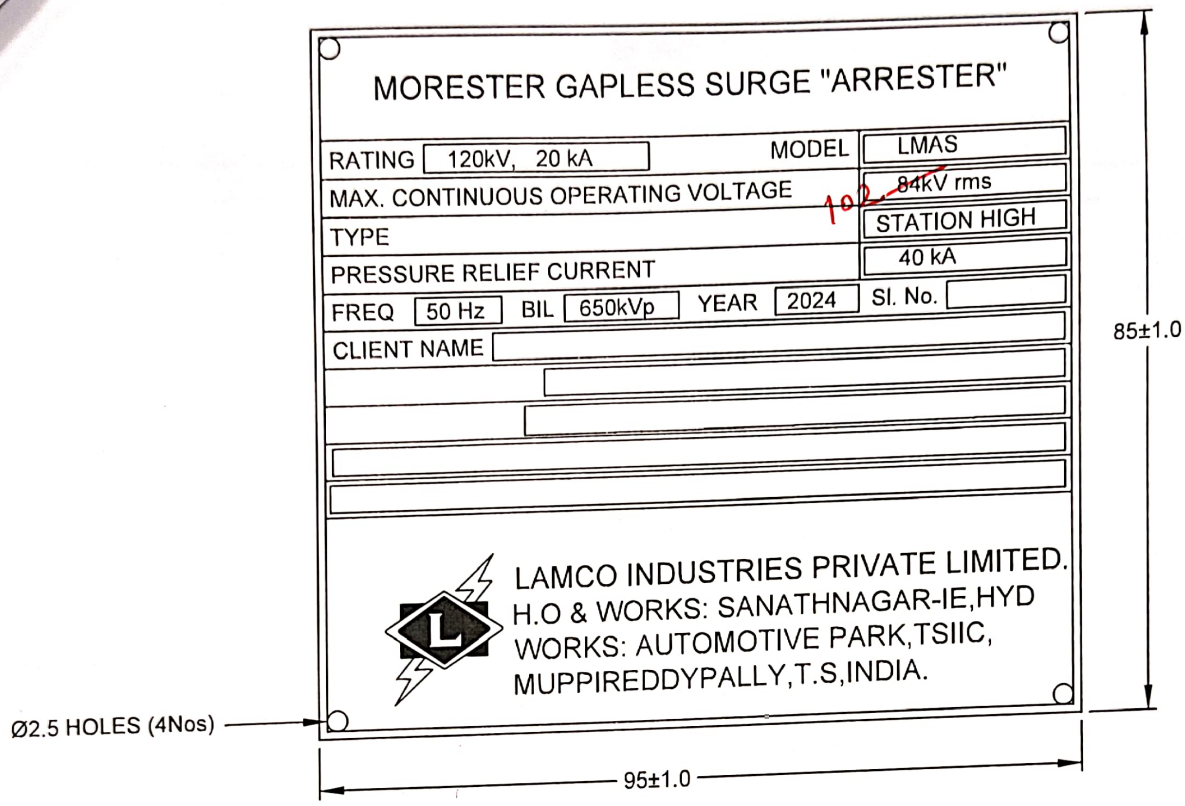

NOTE:

1) MATERIAL:THICKNESS 0.51mm ±0.05 (25 SWG) ALUMINIUM SHEET.

2) PRINTING:-
   a) BORDER LINE AND LETTERS WHITE ON BLACK BACKGROUND.
   b) LETTER 'L' IN MONOGRAM IS BLACK ON WHITE BACKGROUND.
   c) RECTANGULAR BLANKS WHITE, LETTERS BLACK. (as corrected)
   d) LETTERS TO BE ETCHED.

APPROVED
Subject to the condition that you are not absolved of the responsibility for correctness of the materials supplied as per specification
Ram Chandra
Electrical Superintending Engineer
(Planning and Engineering)
Bihar State Power Transmission Company Limited
Vidyut Bhawan, Patna-800021
31/1/24

REV. No.	BREIF DESCRIPTION			SIGNATURE	DATE
LAMCO INDUSTRIES PRIVATE LIMITED. H.O & WORKS: SANATHNAGAR-IE,HYD WORKS: AUTOMOTIVE PARK,TSIIC, MUPPIREDDYPALLY,T.S,INDIA.	TOLERANCE AS INDICATED	PROJECTION	DRAWN	Balaji	29.01.2024
			CHECKED		29.01.2024
	ALL DIMENSIONS ARE IN mm	SCALE : NTS	APPROVED		29.01.2024

TITLE : MASTER NAME PLATE

DRAWING NUMBER 8004410

ISSUE - 1

REV - 0

GUARANTEED TECHNICAL PARTICULARS FOR 30KV 20KA TYPE-SH METAL-OXIDE GAPLESS PORCELAIN LIGHTNING ARRESTERS

1. Name of the manufacture : LAMCO INDUSTRIES PRIVATE LIMITED., H.O & WORKS: SANATHNAGAR-I.E,HYD. WORKS: AUTOMOTIVE PARK, TSIIC, MUPPIREDDYPALLY, T.S, INDIA.

2. Type : Station Class Metal-Oxide Gapless Lightning Arrester "MORESTER"Type-SH, Model-LMAS.

3. Reference Standard : IEC 60099-4 of 2014

4. Model (Drg. No.) : 2210304A

5. No. of Units : One

6. Rated Voltage : 30 KV

7. Nominal discharge current : 20 KA

8. Long Duration Discharge Class : Class-4

9. Designation of Arrester : Station High

10. Reference current : 4 mA

11. Reference voltage : Greater than the rated Arrester voltage at reference current-4mA

12. Leakage Current at COV : Less than 0.8 mA

13. Max. continuous operating voltage : 25.5 KVrms

14. Maximum residual voltage for discharge current of (8/20 micro sec. wave)
    - i) 5000 Amps : 85 KVpeak
    - ii) 10000 Amps : 90 KVpeak
    - iii) 20000 Amps : 100 KVpeak

15. Max. steep front residual voltage at 10KA with one micro sec. rise time : 100 KVpeak

16. Max. switching impulse residual voltage with 40/80 us wave at 500 Amps : 80 KVpeak

17. Energy dissipation capability (Cumulative of 3 sequential shots) : 12KJ/KV

APPROVED
Subject to the condition that you are not absolved of the responsibility for correctness of the materials supplied as per specification.
Electrical Superintending Engineer
(Planning and Engineering)
Bihar State Power Transmission Company Limited
Vidyut Bhawan, Patna-800021
3/15/24

Continued on page...2

(2210304A)

G.T.P 30KV 20KA L.A's (continued..2)

18. High current 4/10 u sec. test value	:	100 KApeak
19. Long duration current tests		
i) Current peak	:	As per discharge Class-4 of IEC 99-4 (Table-4).
ii) Virtual duration	:	2400 us
20. Pressure relief class	:	Class 'A'
21. Short circuit current capability	:	40 KArms
22. Partial discharge at 1.05 times MCOV	:	Less than 10 pC
23. Temporary over voltage withstand value for		
a) 1.0 Second	:	34.5 KVrms
b) 10.0 Second	:	33.0 KVrms
c) 100.0 Second	:	31.5 KVrms
24. Insulation withstand strength of Arrester housing		
i) One minute 50 Hz dry & wet	:	120 KVrms
ii) Lightning impulse voltage withstand	:	250 KVpeak
25. Nominal Creepage distance	:	1250 mm
26. Weight of complete unit	:	31 ±10% Kgs
27. Height of the Arrester	:	Refer Drg No. 2210304A
28. Minimum recommended centre to centre spacing between Arresters	:	555 mm
29. Clearance required from ground equipment at various heights of Arrester unit	:	440 mm
30. Earthing arrangement provided for earthing side of Arrester	:	Ground Terminal Bracket (Drg. 6220154) provided for connecting earth strip
31. Mounting flange dimensional details	:	End castings, 3 holes (12.5mmØ) 120 deg apart at 250 mm PCD.

for **LAMCO INDUSTRIES PRIVATE LIMITED.**

APPROVED
Subject to the condition that you are not absolved of the responsibility for correctness of the materials supplied as per specification
Electrical Superintending Engineer
(Planning and Engineering)
Bihar State Power Transmission Company Limited
Vidyut Bhawan, Patna-800021
3/5/24

(K.ARUN)
SENIOR MANAGER (D&D)

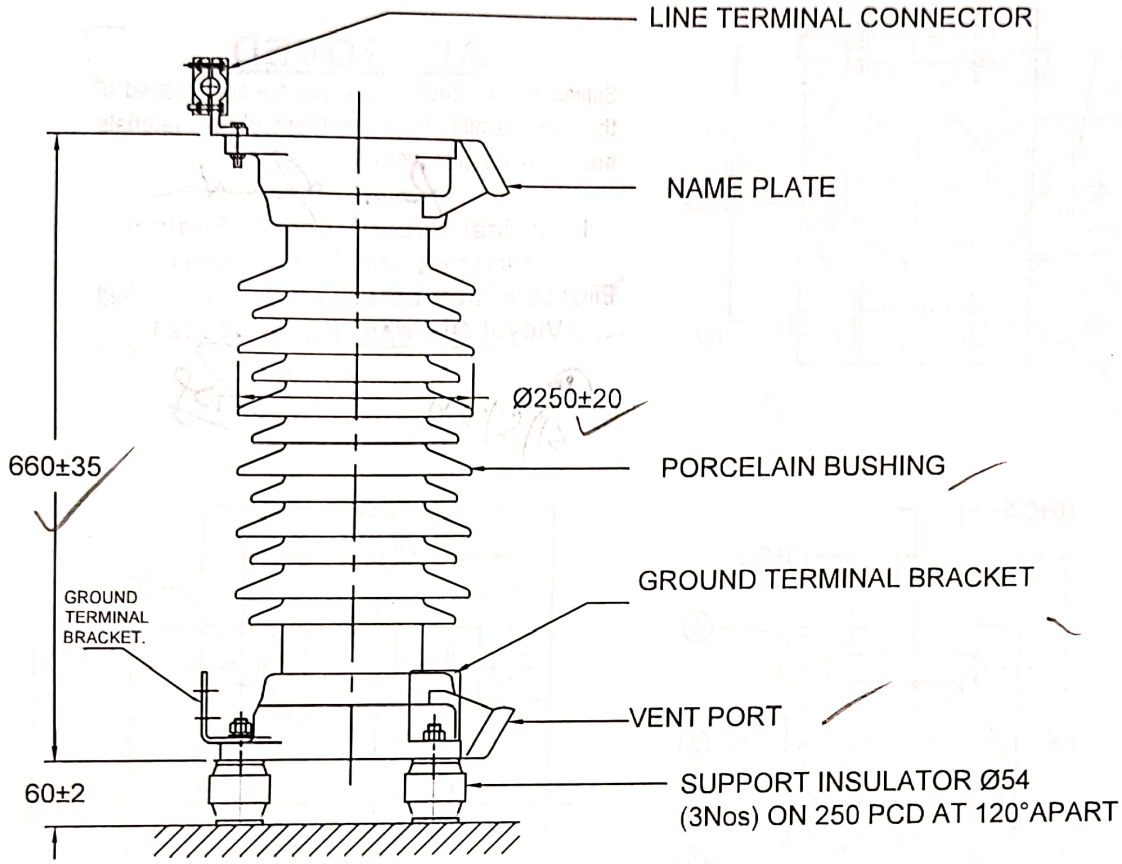

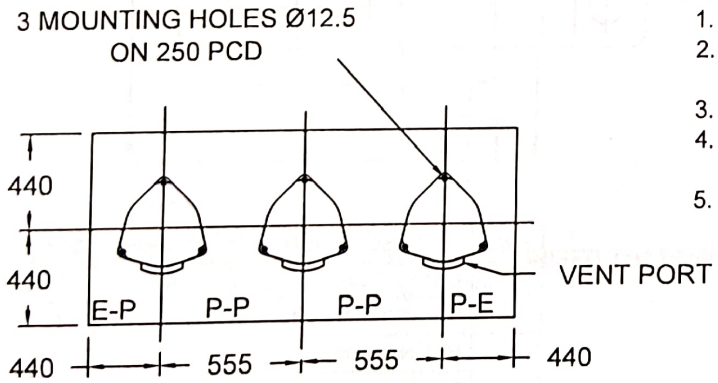

3 PHASE INSTALLATION

NOTE :

1. FOR SURGE MONITOR REFER Drg. No. : 4249001A.
2. FOR INSTALLATION AND INTERCONNECTION REFER Drg. No. : 4320010.
3. TOTAL CREEPAGE DISTANCE : 1250mm (NOM).
4. ARRESTER VENT PORTS SHOULD BE DIRECTED TOWARDS SAFE DIRECTION.
5. WEIGHT OF THE ARRESTER : 31 ±10% Kgs.

APPROVED

Subject to the condition that you are not absolved of the responsibility for correctness of the materials supplied as per specification

Electrical Superintending Enginer
(Planning and Engineering)
Bihar State Power Transmission Company Limited
Vidyut Bhawan, Patna-800021

29/5/24

REV. No.	BREIF DESCRIPTION	SIGNATURE	DATE

LAMCO INDUSTRIES PRIVATE LIMITED.
H.O & WORKS: SANATHNAGAR-IE,HYD
WORKS: AUTOMOTIVE PARK,TSIIC,
MUPPIREDDYPALLY,T.S,INDIA.

TOLERANCE AS INDICATED	PROJECTION	DRAWN		29.01.2024
		CHECKED		29.01.2024
ALL DIMENSIONS ARE IN mm	SCALE : NTS	APPROVED		29.01.2024

TITLE : 30kV, 20kA LIGHTNING ARRESTER
(MORESTER TYPE LMAS)

DRAWING NUMBER 2210304-A

ISSUE - 1
REV - 0

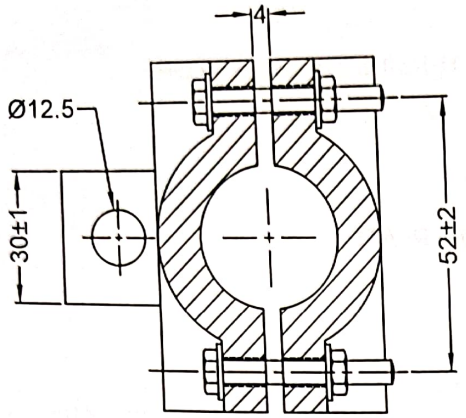

APPROVED
Subject to the condition that you are not absolved of the responsibility for correctness of the materials supplied as per specification
Electrical Superintending Engineer
(Planning and Engineering)
Bihar State Power Transmission Company Limited
Vidyut Bhawan, Patna-800021
31/5/24

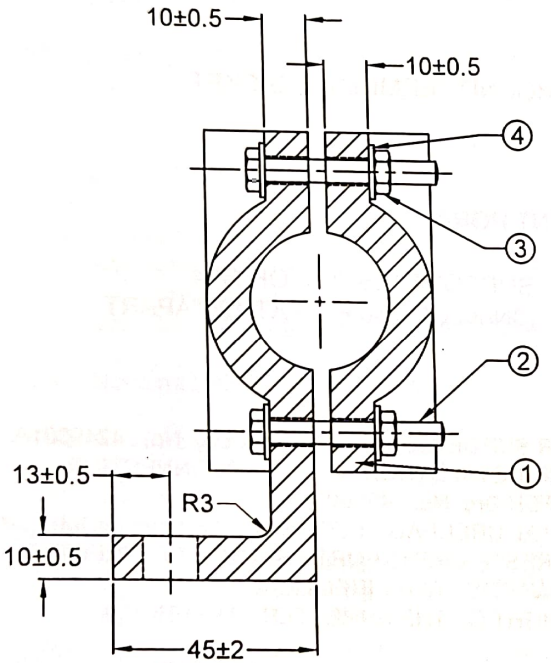

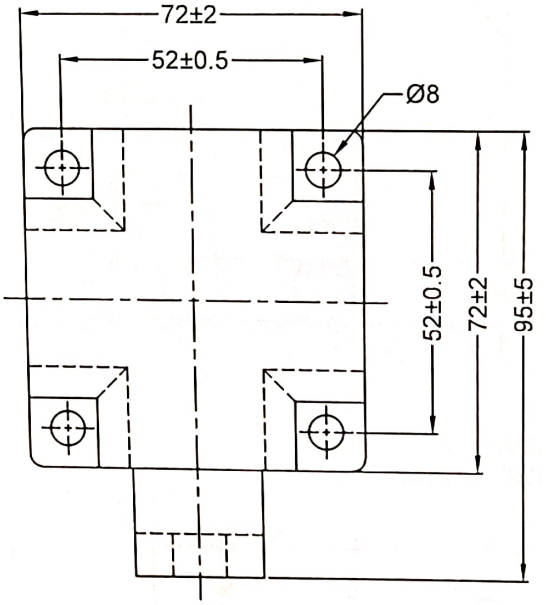

Sl.No.	DESCRIPTION	MATERIAL	QTY.
1.	CONNECTOR CLAMPS	AL.ALLOY	2
2.	HEX BOLT M6 × 40	G.I	4
3.	HEX NUT M6	G.I	4
4.	PLAIN WASHER M6	G.I	4

WEIGHT : 400 grms±10%

REV. No.	BREIF DESCRIPTION			SIGNATURE	DATE
LAMCO INDUSTRIES PRIVATE LIMITED. H.O & WORKS: SANATHNAGAR-IE,HYD WORKS: AUTOMOTIVE PARK,TSIIC, MUPPIREDDYPALLY,T.S,INDIA.	TOLERANCE AS INDICATED	PROJECTION	DRAWN		29.01.2024
			CHECKED		29.01.2024
	ALL DIMENSIONS ARE IN mm	SCALE : NTS	APPROVED		29.01.2024

TITLE : LINE TERMINAL CONNECTOR SUITABLE FOR MOOSE CONDUCTOR(Ø31.775)

DRAWING NUMBER 6420001

ISSUE - 1
REV - 0

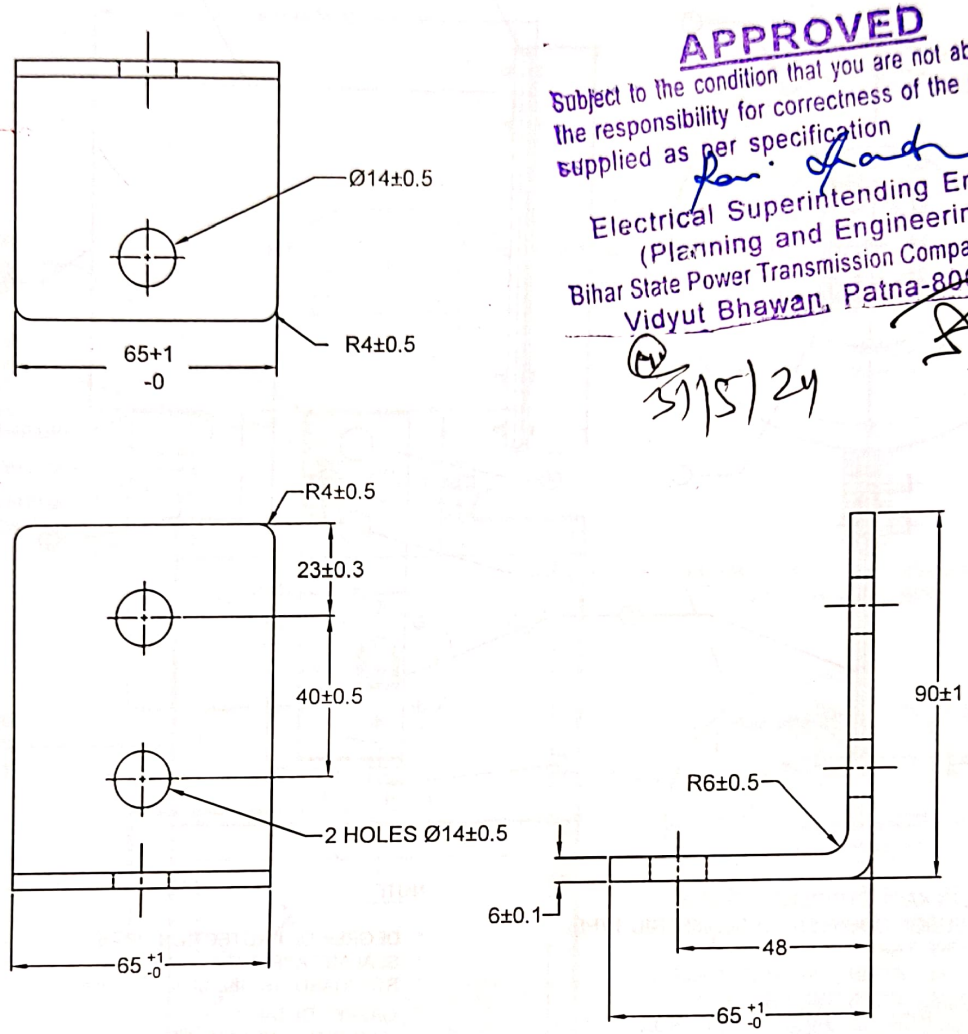

APPROVED
Subject to the condition that you are not absolved of the responsibility for correctness of the materials supplied as per specification
Electrical Superintending Engineer
(Planning and Engineering)
Bihar State Power Transmission Company Limited
Vidyut Bhawan, Patna-800021
31/5/24

NOTE :
1. MATERIAL : M.S.PLATE.
2. FINISH : HOT DIP GALVANISED. (<80 MICRONS)
3. WEIGHT : 400 gms.±10%

REV. No.	BREIF DESCRIPTION			SIGNATURE	DATE
LAMCO INDUSTRIES PRIVATE LIMITED. H.O & WORKS: SANATHNAGAR-IE,HYD WORKS: AUTOMOTIVE PARK,TSIIC, MUPPIREDDYPALLY,T.S,INDIA.	TOLERANCE AS INDICATED	PROJECTION	DRAWN	Bablu	29.01.2024
			CHECKED		29.01.2024
	ALL DIMENSIONS ARE IN mm	SCALE : NTS	APPROVED		29.01.2024
TITLE : GROUND TERMINAL BRACKET			DRAWING NUMBER 6220154		ISSUE - 1 REV - 0

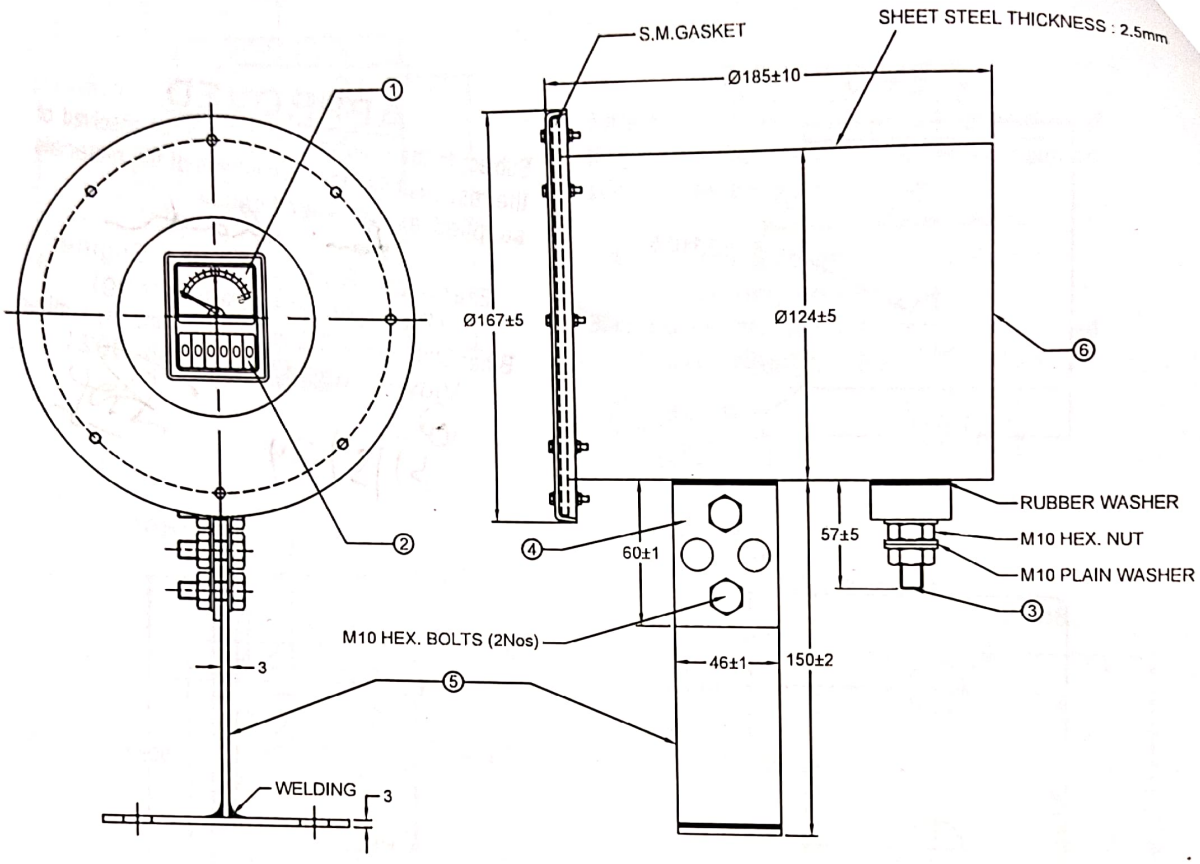

1. LEAKAGE CURRENT MONITOR.
2. SURGE COUNTER, CYCLOMETRIC TYPE.
3. LINE TERMINAL.
4. S.M. - STRIP (EARTH TERMINAL).
5. S.M. - MOUNTING BRACKET.
6. HOT DIP GALVANISED S.M. - BOX.
   a) 0 - 6mA (HEALTHY) GREEN ZONE
   b) 6 - 10mA (DANGER) RED ZONE

NOTE :

* DEGREE OF PROTECTION : IP - 67
* SEALANT APPLIED AT GASKETS
* STANDARD : IS / IEC 60947-1 : 2004
* GASKET DETAILS:
  MATERIAL : NEOPRENE RUBBER.
  SIZE : OD-161mm, ID-125mm, Thick-5mm.
  CROSS SECTION VIEW OF GASKET Ref. Drg. No.4250002
  WEIGHT : 2.8Kgs ± 10%.

APPROVED
Subject to the condition that you are not absolved of the responsibility for correctness of the materials supplied as per specification
Electrical Superintending Engineer
(Planning and Engineering)
Bihar State Power Transmission Company Limited
Vidyut Bhawan, Patna-800021
31/3/2021

REV. No.	BREIF DESCRIPTION			SIGNATURE	DATE
LAMCO INDUSTRIES PRIVATE LIMITED. H.O & WORKS: SANATHNAGAR-IE,HYD WORKS: AUTOMOTIVE PARK,TSIIC, MUPPIREDDYPALLY,T.S,INDIA.	TOLERANCE AS INDICATED	PROJECTION	DRAWN		29.01.2024
			CHECKED		29.01.2024
	ALL DIMENSIONS ARE IN mm	SCALE : NTS	APPROVED		29.01.2024

TITLE : SURGE MONITOR G.A.

DRAWING NUMBER 4249001A

ISSUE - 1

REV - 0

L THICKNESS : 2.5mm

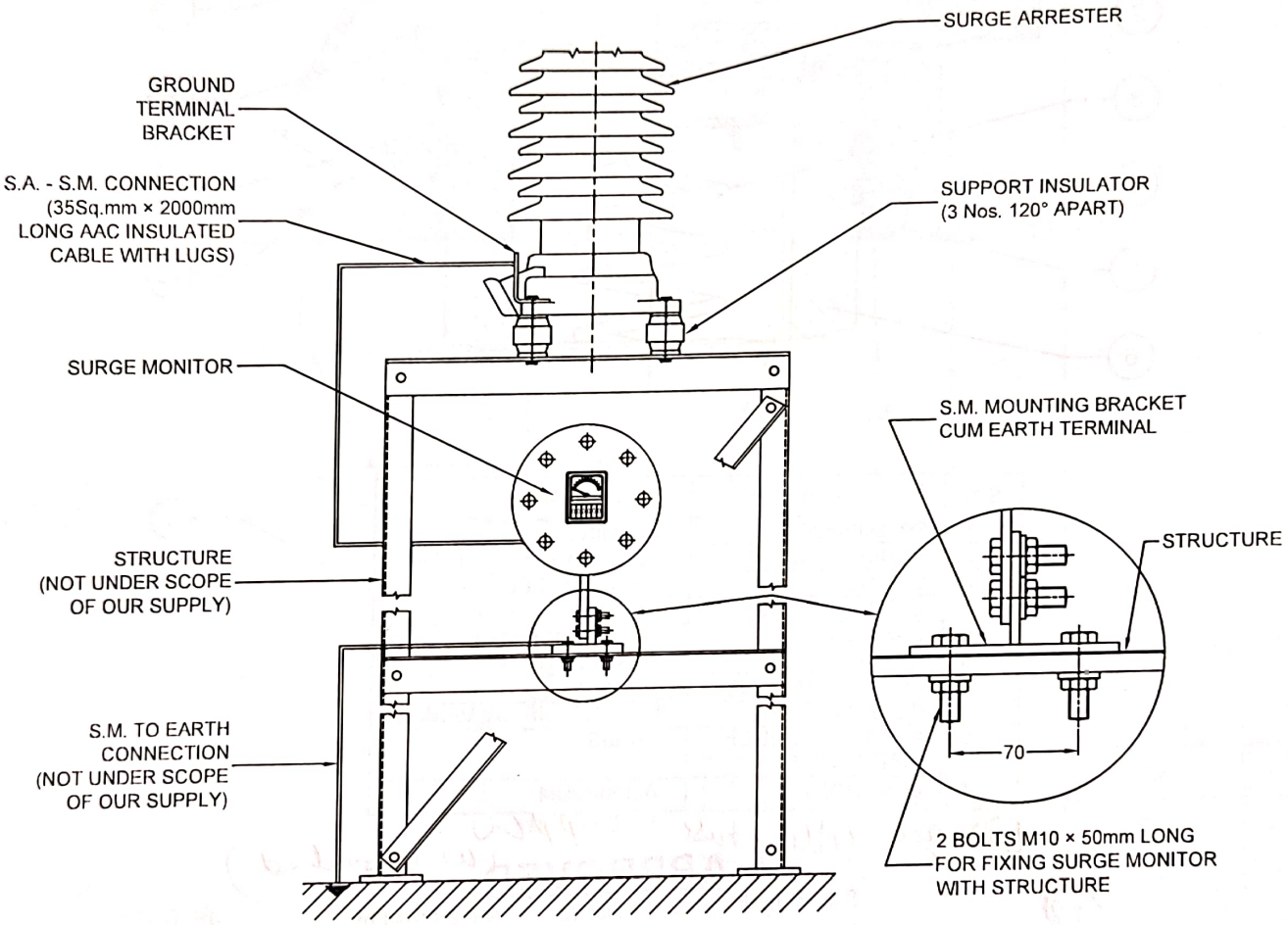

APPROVED
Subject to the condition that you are not absolved of the responsibility for correctness of the materials supplied as per specification
Electrical Superintending Enginer
(Planning and Engineering)
Bihar State Power Transmission Company Limited
Vidyut Bhawan, Patna-800021

REV. No.	BREIF DESCRIPTION			SIGNATURE	DATE
	31/5/24				
LAMCO INDUSTRIES PRIVATE LIMITED. H.O & WORKS: SANATHNAGAR-IE,HYD WORKS: AUTOMOTIVE PARK,TSIIC, MUPPIREDDYPALLY,T.S,INDIA.	TOLERANCE AS INDICATED	PROJECTION	DRAWN		29.01.2024
			CHECKED		29.01.2024
	ALL DIMENSIONS ARE IN mm	SCALE : NTS	APPROVED		29.01.2024

TITLE :	DRAWING NUMBER	ISSUE - 1
METHOD OF CONNECTING SURGE MONITOR WITH SURGE ARRESTER	4320010	REV - 0

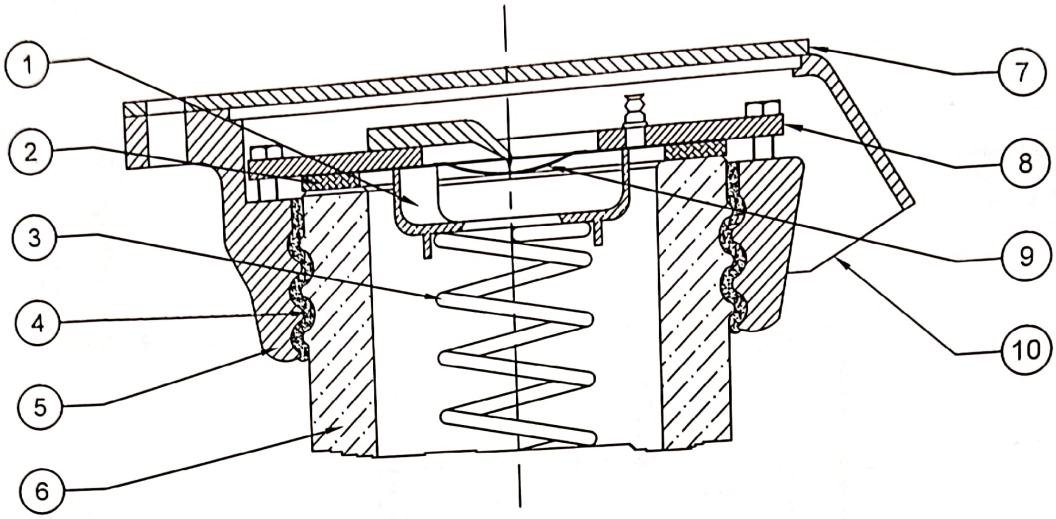

S.No.	ITEM	MATERIAL
1.	SP. SUPPORT.	ALUMINUM
2.	RUBBER GASKET.	NEOPRENE ,5mm THICK
3.	SPRING.	SPRING STEEL
4.	SULPHUR CEMENT.	SULPHUR CEMENT
5.	CASTING.	ALUMINIUM (LM-6)
6.	BUSHING.	PORCELAIN
7.	END COVER PLATE.	ALUMINIUM
8.	COVER PLATE.	M.S (HOT DIP GALVANIZED)
9.	PRESSURE RELIEF DIAPHRAGM.	BRASS
10.	VENT PORT.	ALUMINIUM

(ii) gas filling tube - copper (as inserted)

(12) fuse wise - copper

APPROVED
Subject to the condition that you are not absolved of the responsibility for correctness of the materials supplied as per specification.
Electrical Superintending Engineer
(Planning and Engineering)
Bihar State Power Transmission Company Limited
Vidyut Bhawan, Patna-800021
3/5/24

REV. No.	BREIF DESCRIPTION	SIGNATURE	DATE

LAMCO INDUSTRIES PRIVATE LIMITED.
H.O & WORKS: SANATHNAGAR-IE,HYD
WORKS: AUTOMOTIVE PARK,TSIIC,
MUPPIREDDYPALLY,T.S,INDIA.

TOLERANCE AS INDICATED	PROJECTION	DRAWN		29.01.2024
		CHECKED		29.01.2024
ALL DIMENSIONS ARE IN mm	SCALE : NTS	APPROVED		29.01.2024

TITLE : PRESSURE RELIEF AND SEALING ARRANGEMENT OF MORESTER

DRAWING NUMBER 4220041

ISSUE - 1
REV - 0

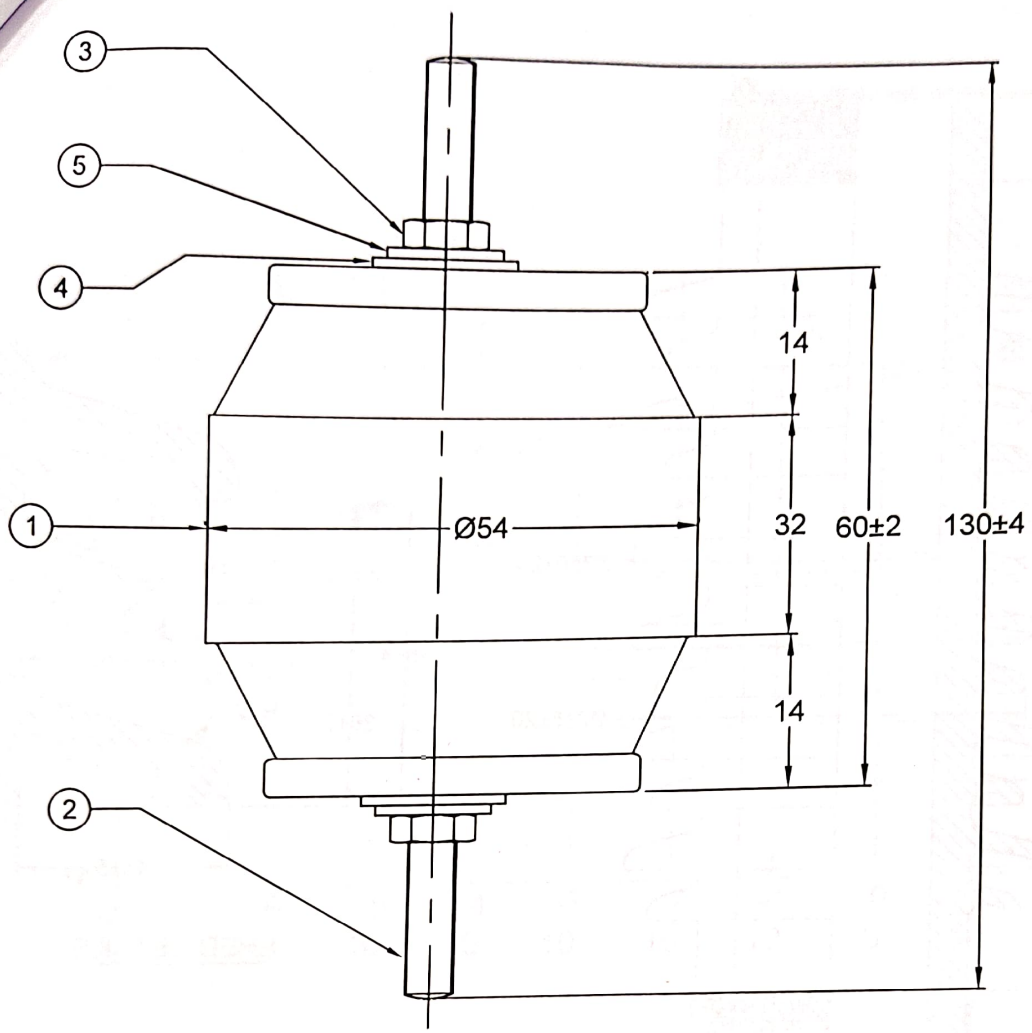

ITEM	DESRCIPTION	MATERIAL	QTY.
5	SPRING WASHER M12	S.S.	2
4	PLAIN WASHER M12	S.S.	2
3	NUT M12	S.S.	2
2	STUD M12	S.S.	2
1	INSULATOR	POLYMER	1

NOTE :
1. MATERIAL : POLYMER
2. HARDWARE : S.S
3. WEIGHT : 250 Grms±10%

APPROVED
Subject to the condition that you are not absolved of the responsibility for correctness of the materials supplied as per specification
Electrical Superintending Enginer
(Planning and Engineering)
Bihar State Transmission Company Limited
Vidyut Bhawan, Patna-800021

REV. No.	BRIEF DESCRIPTION	SIGNATURE	DATE

LAMCO INDUSTRIES PRIVATE LIMITED.
H.O & WORKS: SANATHNAGAR-IE,HYD
WORKS: AUTOMOTIVE PARK,TSIIC,
MUPPIREDDYPALLY,T.S,INDIA.

TOLERANCE AS INDICATED	PROJECTION	DRAWN	Bailey	29.01.2024
		CHECKED		29.01.2024
ALL DIMENSIONS ARE IN mm	SCALE : NTS	APPROVED		29.01.2024

TITLE : SUPPORT INSULATOR - Ø54
MODEL IB-14

DRAWING NUMBER 6221036

ISSUE - 1
REV - 0

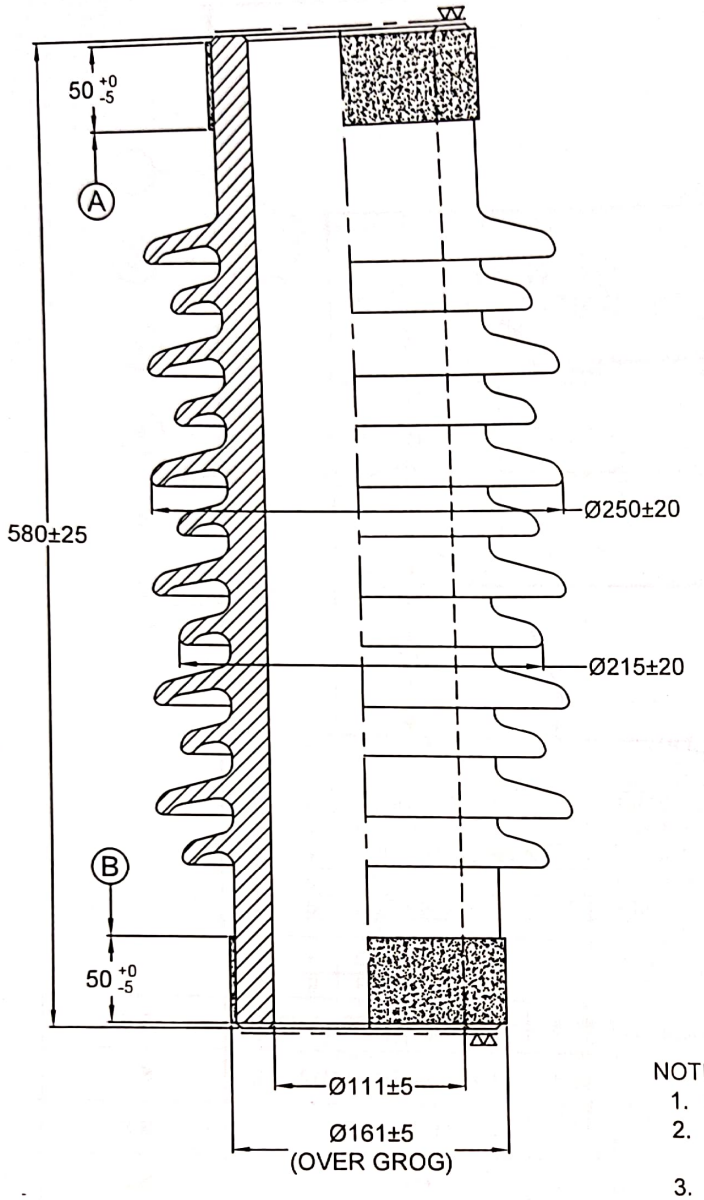

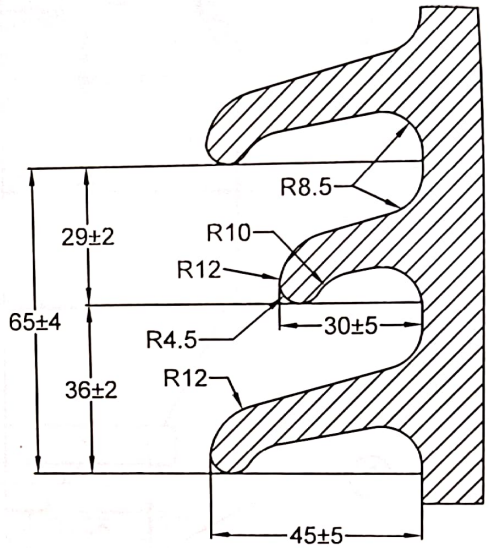

SHED DETAILS

NOTE :

1. CREEPAGE DISTANCE FROM A TO B 1250 (NOM).
2. SURFACES MARKED ' ∇ ' UNGLAZED, PARALLEL TO EACH OTHER AND PERPENDICULAR TO AXIS.
3. GLAZE : DARK BROWN.
4. BORE SHOULD BE STRAIGHT AND UNIFORM DIA.
5. APPLICABLE STANDARD - IEC-62155
6. WEIGHT : 24±10% Kgs.

APPROVED
Subject to the condition that you are not absolved of the responsibility for correctness of the materials supplied as per specification.
Ravi Kant
Electrical Superintending Engineer
(Planning and Engineering)
Bihar State Power Transmission Company Limited
Vidyut Bhawan, Patna-800021

REV. No.	BREIF DESCRIPTION			SIGNATURE	DATE
	TOLERANCE AS INDICATED	PROJECTION	DRAWN		29.01.2024
			CHECKED		29.01.2024
	ALL DIMENSIONS ARE IN mm	SCALE : NTS	APPROVED		29.01.2024

31/5/24

LAMCO INDUSTRIES PRIVATE LIMITED.
H.O & WORKS: SANATHNAGAR-IE,HYD
WORKS: AUTOMOTIVE PARK,TSIIC,
MUPPIREDDYPALLY,T.S,INDIA.

TITLE :

PORCELAIN BUSHING - 3642

DRAWING NUMBER 6320005A

ISSUE - 1
REV - 0

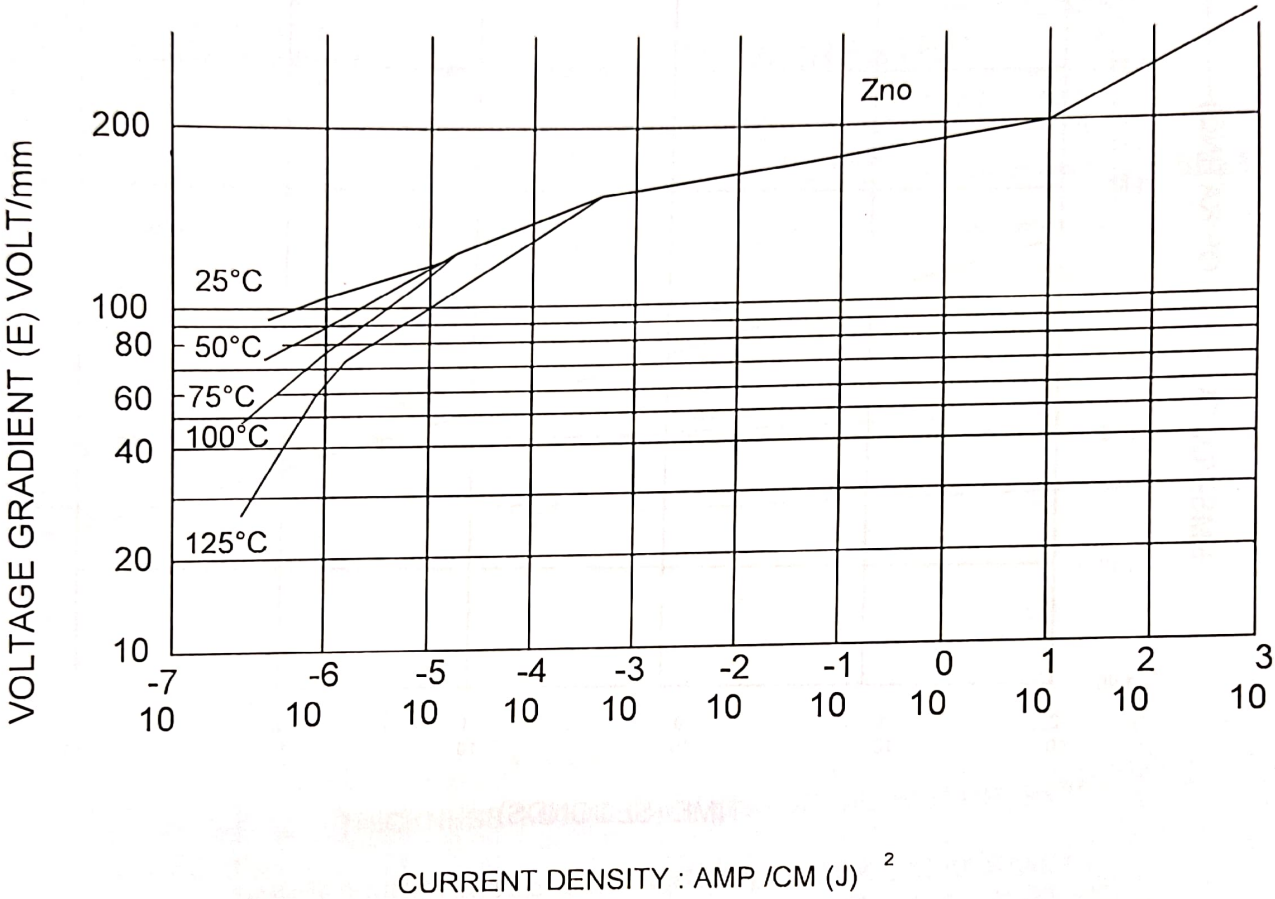

APPROVED
Subject to the condition that you are not absolved of the responsibility for correctness of the materials supplied as per specification

Superintending Enginer
(Planning and Engineering)
Bihar State Power Transmission Company Limited
Vidyut Bhawan, Patna-800021
31/5/24

REV. No.	BREIF DESCRIPTION			SIGNATURE	DATE
LAMCO INDUSTRIES PRIVATE LIMITED. H.O & WORKS: SANATHNAGAR-IE,HYD WORKS: AUTOMOTIVE PARK,TSIIC, MUPPIREDDYPALLY,T.S,INDIA.	TOLERANCE AS INDICATED	PROJECTION	DRAWN	Babu	29.01.2024
			CHECKED		29.01.2024
	ALL DIMENSIONS ARE IN mm	SCALE : NTS	APPROVED		29.01.2024

TITLE :	DRAWING NUMBER	ISSUE - 1
CHARACTERISTIC CURVES OF ZnO ELEMENTS	8221010	REV - 0

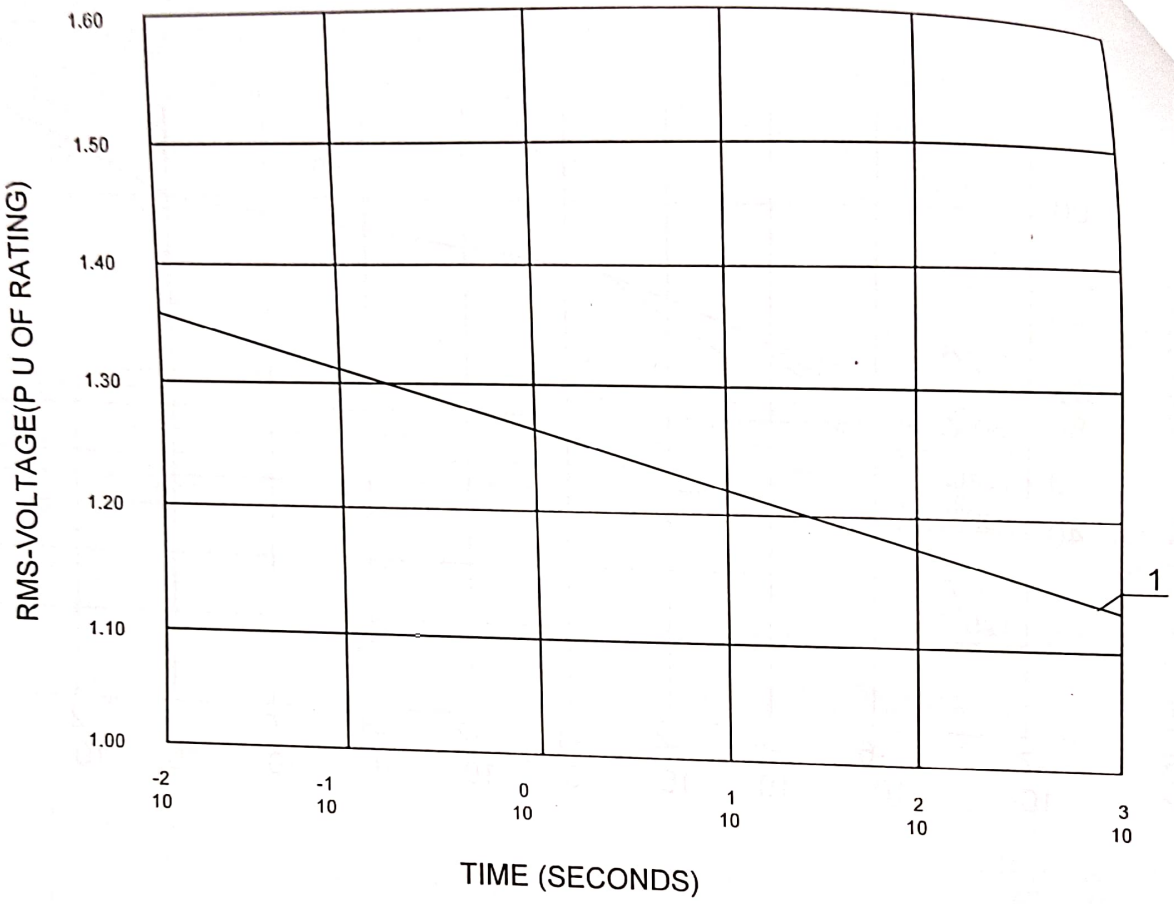

1) TOV CAPABILITY WITHOUT ENERGY ABSORPTION

APPROVED
Subject to the condition that you are not absolved of the responsibility for correctness of the materials supplied as per specification

Electrical Superintending Engineer
(Planning and Engineering)
Bihar State Power Transmission Company Limited
Vidyut Bhawan, Patna-800021

REV. No.	BREIF DESCRIPTION			SIGNATURE	DATE
LAMCO INDUSTRIES PRIVATE LIMITED. H.O & WORKS: SANATHNAGAR-IE,HYD WORKS: AUTOMOTIVE PARK,TSIIC, MUPPIREDDYPALLY,T.S,INDIA.	TOLERANCE AS INDICATED	PROJECTION	DRAWN		29.01.2024
			CHECKED		29.01.2024
	ALL DIMENSIONS ARE IN mm	SCALE : NTS	APPROVED		29.01.2024

TITLE : POWER FREQUENCY VOLTAGE Vs TIME CHARACTERISTICS (20KA)

DRAWING NUMBER 8221019A

ISSUE - 1
REV - 0

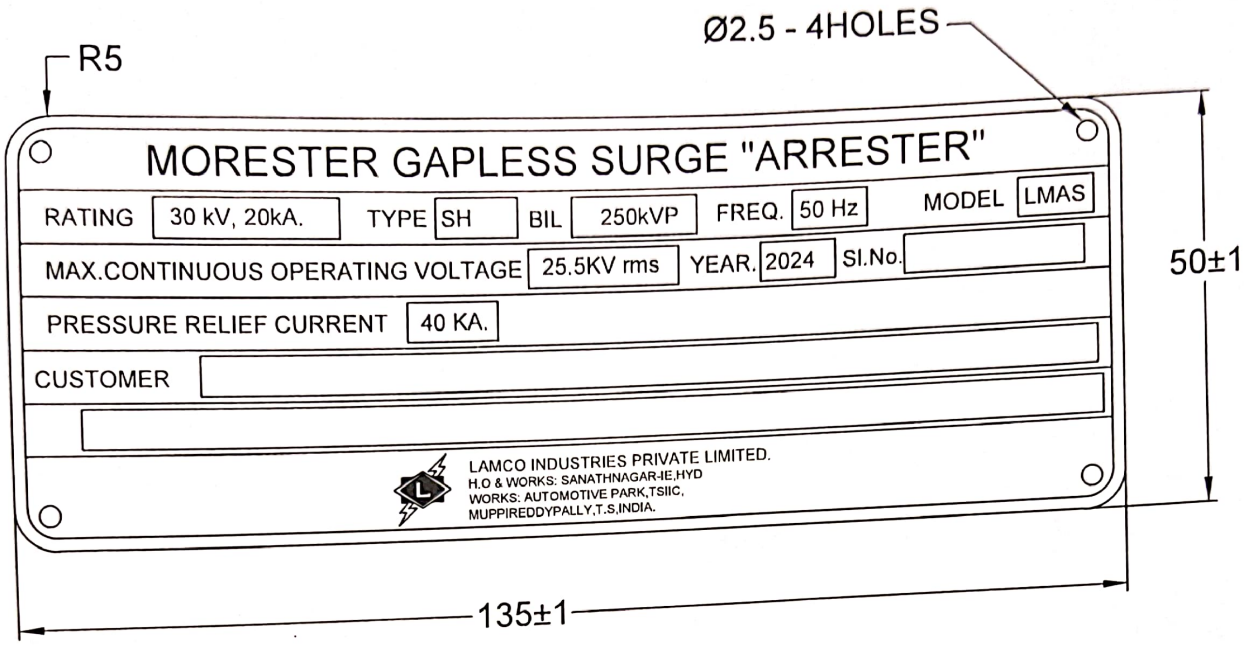

NOTE:

1. MATERIAL : THICKNESS 0.51 ± 0.05mm (25SWG) ALUMINIUM SHEET.
2. PRINTING :
   a. BORDER LINE AND LETTERS WITH ON BLACK BACKGROUND.
   b. LETTER 'L' IN MONOGRAM IS BLACK ON WHITE BACK GROUND.
   c. RECTANGULAR BLANKS WHITE, LETTERS BLACK.
   d. LETTERS TO BE ETCHED.

APPROVED
Subject to the condition that you are not absolved of the responsibility for correctness of the materials supplied as per specification
Electrical Superintending Engineer
(Planning and Engineering)
Bihar State Power Transmission Company Limited
Vidyut Bhawan, Patna-800021

REV. No.	BREIF DESCRIPTION			SIGNATURE	DATE
LAMCO INDUSTRIES PRIVATE LIMITED. H.O & WORKS: SANATHNAGAR-IE,HYD WORKS: AUTOMOTIVE PARK,TSIIC, MUPPIREDDYPALLY,T.S,INDIA.	TOLERANCE AS INDICATED	PROJECTION	DRAWN		29.01.2024
			CHECKED		29.01.2024
	ALL DIMENSIONS ARE IN mm	SCALE : NTS	APPROVED		29.01.2024

TITLE :	DRAWING NUMBER	ISSUE - 1
GENERAL NAME PLATE MORESTER	8004401	REV - 0